E1 TOTAL-BODY ELLIPTICAL CROSS-TRAINER

E1-XX00-0105, E1-XX14-0105

PARTS MANUAL



January 2021

Table of Contents

Miscellaneous	**2**
Upright	**3**
User Arm	**5**
Pedal Lever	**6**
Main Shrouds & Crank Covers	**7**
Idler Coupler Assemblies	**8**
Crank Related Components	**9**
Brake & Tensioner Components	**10**
Stabilizer Components & Grommets	**11**
Motor, Reed Switch & Cables	**12**
Wiring Diagram	**13**

Miscellaneous

Item	Alpha Code	Part Number	Description (Quantity)
MISC-001	E1X	8974001	ASSY, TRANSFORMER, 100-240V, 9V, 1.5A, DOM
MISC-002	E1X	8974101	ASSY, TRANSFORMER, 100-240V, 9V, 1.5A, UK
MISC-003	E1X	8974201	ASSY, TRANSFORMER, 100-240V, 9V, 1.5A, CONT
MISC-004	E1X	8974301	ASSY, TRANSFORMER, 100-204V, 9V, 1.5A, AUST
MISC-005	E1X	8974401	ASSY, TRANSFORMER, 100-240V, 9V, 1.5A, BR

Serial Number Table

Item	Alpha Code	Starting Serial Number
E1-XX00-0105	E1X	E1X100001
E1-XX14-0105	E1X	E1X100001

Consoles Used with E1 Base - See Console Parts Manuals

Alpha Code	Part Number	Description (Quantity)
GC	GC-000X-0105	GO CT/BIKE CONSOLE ENG/ENG+MET
GC	GC-020X-0105	GO CT/BIKE CONSOLE GER/MET
GC	GC-040X-0105	GO CT/BIKE CONSOLE SPN/MET
TKC	TKC-000X-0205	TRACK + CT/BIKE CONSOLE ENG/ENG+MET
TKC	TKC-020X-0205	TRACK + CT/BIKE CONSOLE GER/MET

Upright

Parts List

Item	Alpha Code	Part Number	Description (Quantity)
UP-001	E1X	REX3HS1	Upright Junction Cover
UP-003	E1X	REX2S4K	Upright Grommet
UP-004	E1X	REX33N0	Phillips Screw (4)
UP-005	E1X	REX35JA	Console Mast Cover
UP-006	E1X	REX2G72	Cupholder SDW
UP-007	E1X	REX2MX0	Accessory Tray Overlay
UP-008	E1X	REX3GXY	Contact H/R Sensor W/Grommet (2)
UP-009	E1X	REX3ESM	Stationary Grips (2)
UP-010	E1X	REX2S5A	Wire Harness H/R Handlebar
UP-011	E1X	REX2LQH	Cable Upper H/R Sensor to Console
UP-012	E1X	REX2D1X	Ground Screw
UP-013	E1X	REX0JAF	Ext. Tooth Lock Washer
UP-014	E1X	REX2R27	Ground Wire
UP-015	E1X	REX3EVT	Phillips Screw For Mounting Console (4)
UP-016	E1X	REX3ESK	Console Bracket Weldment
UP-017	E1X	REX3EVQ	Screw, PHL PN HD 3.5MM x 16MM BZ
UP-018	E1X	REX3JNN	Hex Bolt (2)
UP-019	E1X	REX38GU	Phillips Screw (4)
UP-020	E1X	1017563-0001	Upright Weldment w/Insert
UP-021	E1X	REX2DVG	Upright Hex Bolt
UP-022	E1X	REX3EVR	Hex Bolt (4)

ILLUSTRATION ON FOLLOWING PAGE

Upright

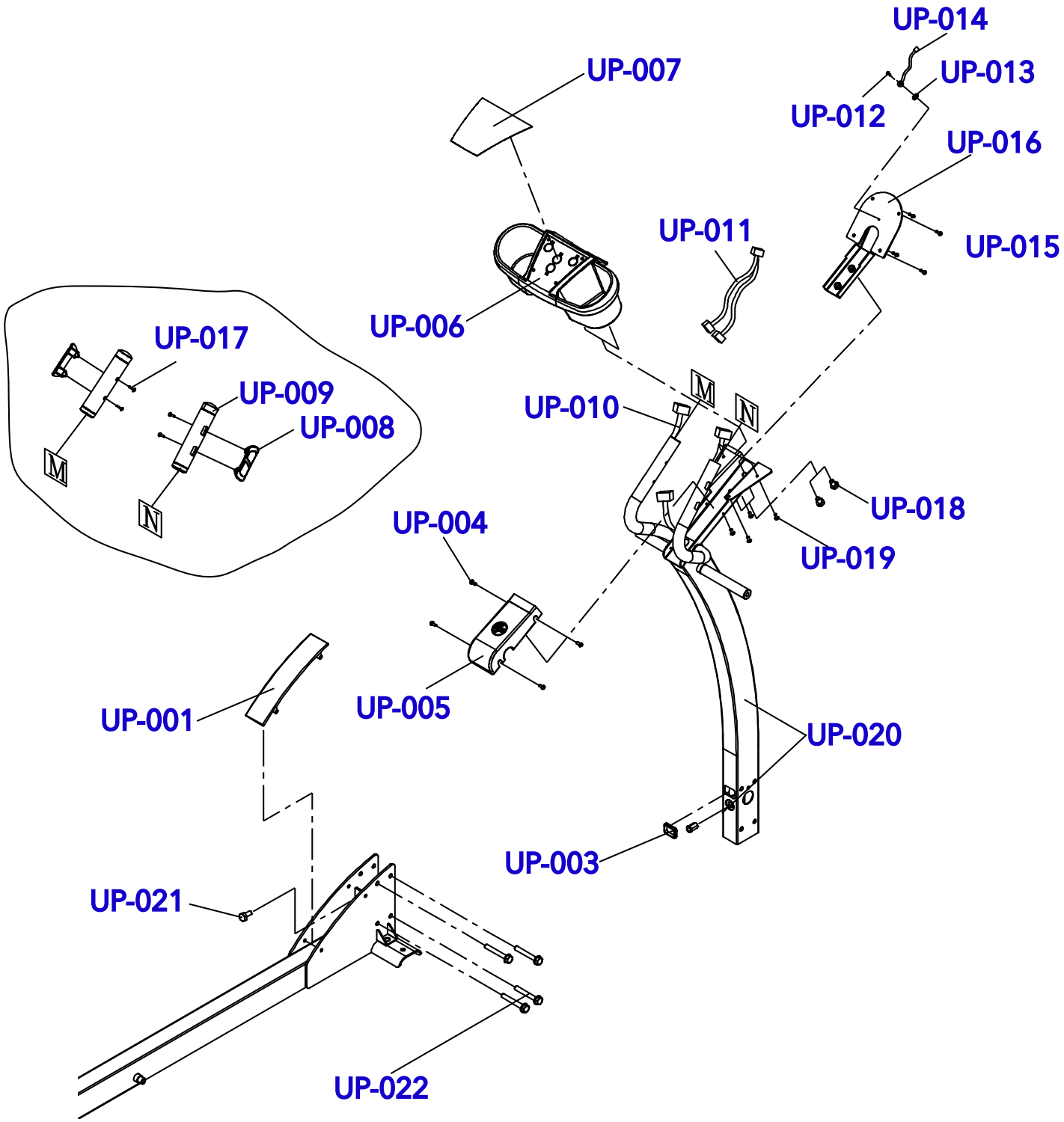
UP-014
UP-007
UP-013
UP-012
UP-016
UP-011
UP-015
UP-006
UP-017
UP-009
UP-008
M
N
UP-010
M
N
UP-018
UP-004
UP-019
UP-001
UP-005
UP-020
UP-003
UP-021
UP-022

User Arm

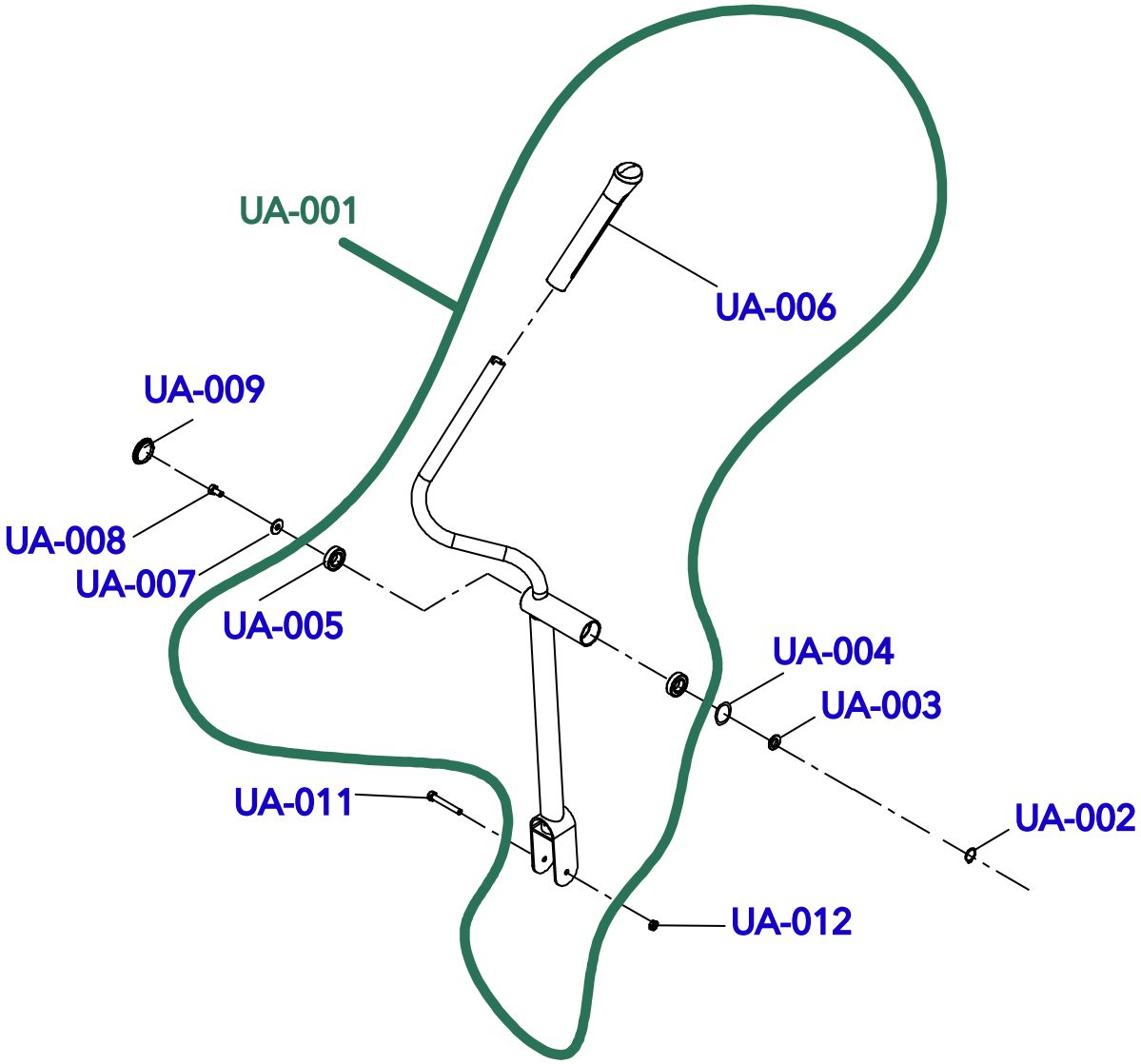

Parts List

Item	Alpha Code	Part Number	Description (Quantity)
UA-001	E1X	REX3EA4	Left Arm User Assembly - *see Note 1*
UA-002	E1X	REX0JEJ	Retaining Ring
UA-003	E1X	REX22B3	Flat Washer
UA-004	E1X	REX0JBD	Wave Washer
UA-005	E1X	3225301	Ball Bearing (2 Per Arm)
UA-006	E1X	REX3E94	Arm Grip
UA-007	E1X	REX2MPQ	Flat Washer
UA-008	E1X	REX2DVG	Hex Bolt
UA-009	E1X	REX3E95	End Cap
UA-010	E1X	REX3E9U	Right Arm User Assembly - *see Note 1* ***(Not shown)***
UA-011	E1X	REX2T9E	Hex Bolt
UA-012	E1X	REX2T9D	M10 X 1.5 Hex Nut Black Zinc

Note 1: Assembly includes User Arm Weldment, Bearings, and Grips.

Pedal Lever

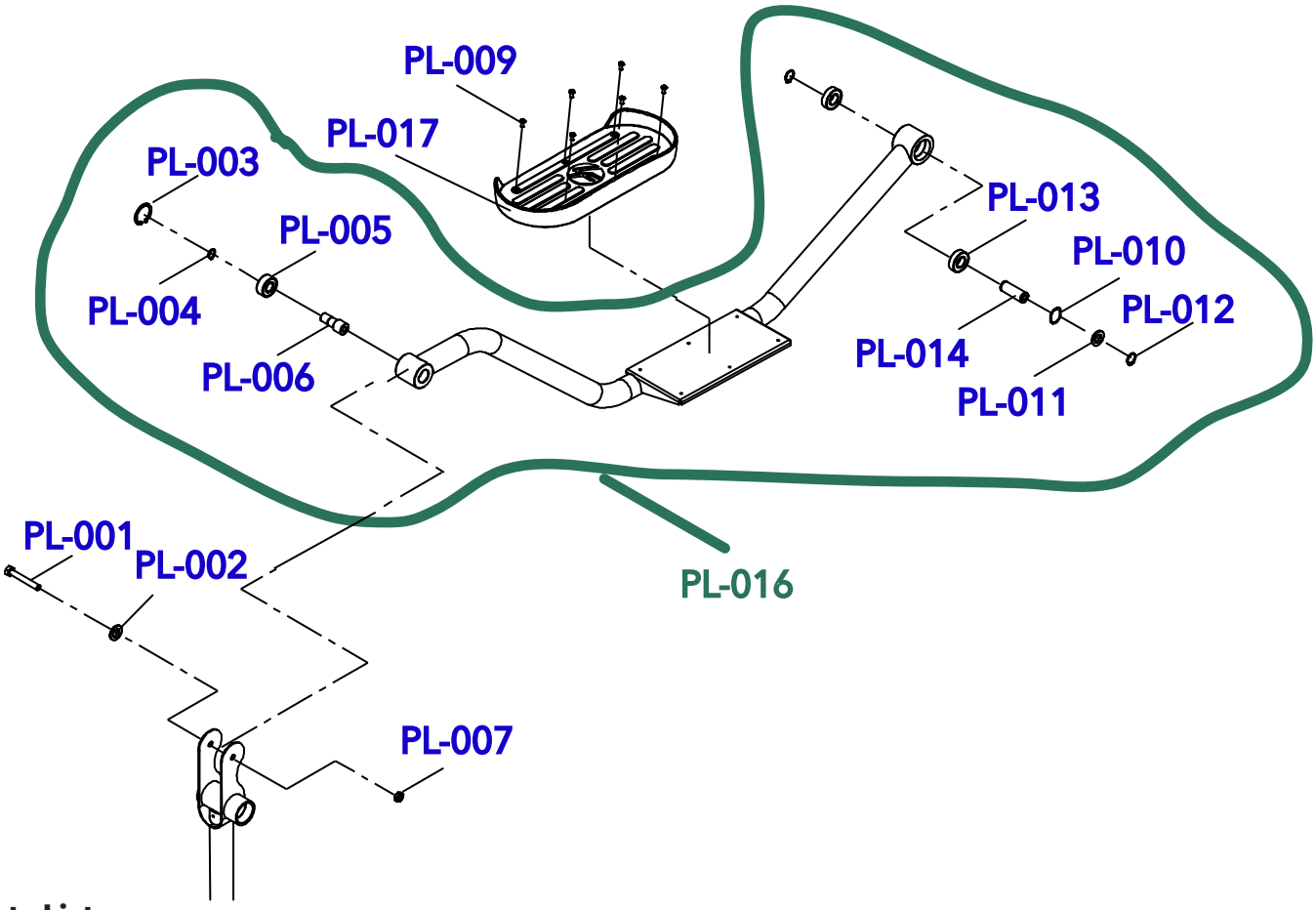

Parts List

Item	Alpha Code	Part Number	Description (Quantity)
PL-001	E1X	REX2T9E	Hex Bolt
PL-002	E1X	REX0J7K	Washer
PL-003	E1X	REX0JE0	Retaining Ring (Large)
PL-004	E1X	REX0JEE	Retaining Ring (Small)
PL-005	E1X	REX2BKB	Self Aligning Bearing
PL-006	E1X	REX2BAD	Shaft
PL-007	E1X	REX2T9D	Hex Nut
PL-008	E1X	REX35JL	Right Pedal *(Not shown)*
PL-009	E1X	REX2T9W	Pedal Screws (6 Per Pedal)
PL-010	E1X	REX0JB7	Wave Washer
PL-011	E1X	REX2NDD	Space Washer
PL-012	E1X	REX0JEG	C-Ring
PL-013	E1X	REX0HVP	Ball Bearing (2 Per Assembly)
PL-014	E1X	REX2LJZ	Link Axle
PL-015	E1X	REX3EA5	Right Pedal Lever Assembly *(Not shown)*
PL-016	E1X	REX3EA6	Left Pedal Lever Assembly
PL-017	E1X	REX35JM	Left Pedal

Main Shrouds & Crank Covers

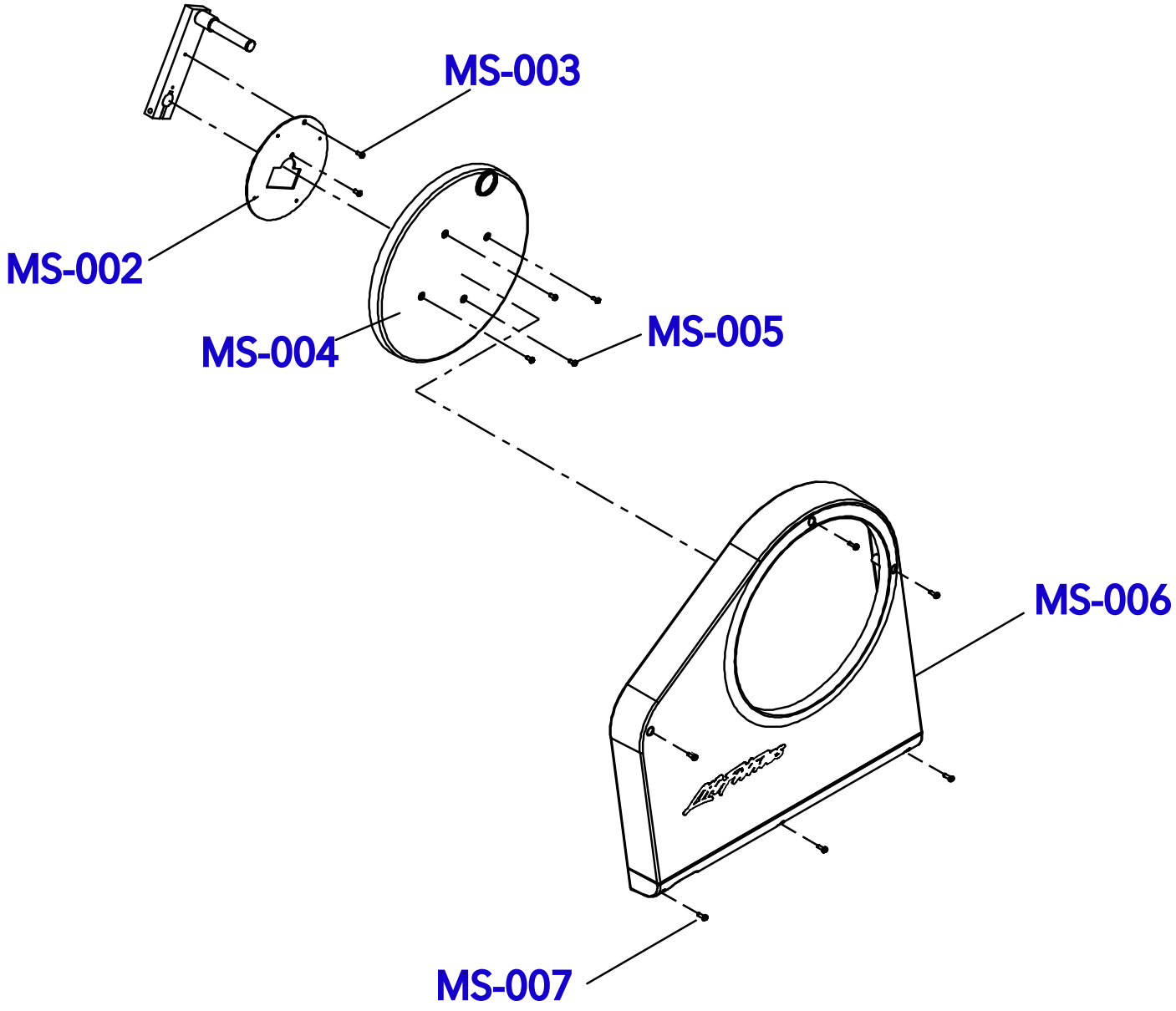

Parts List

Item	Alpha Code	Part Number	Description (Quantity)
MS-001	E1X	REX3E9L	Left Shroud w/ logo *(Not Shown)*
MS-002	E1X	REX2LRT	Crank Plate
MS-003	E1X	REX0K5T	Crank Plate Screws (2)
MS-004	E1X	REX3E9M	Crank Cover
MS-005	E1X	REX3JNZ	Crank Cover Screws (4)
MS-006	E1X	REX3E9K	Right Shroud w/logo
MS-007	E1X	REX2T9X	Shroud Screws (6 Per Shroud)

Idler Coupler Assemblies

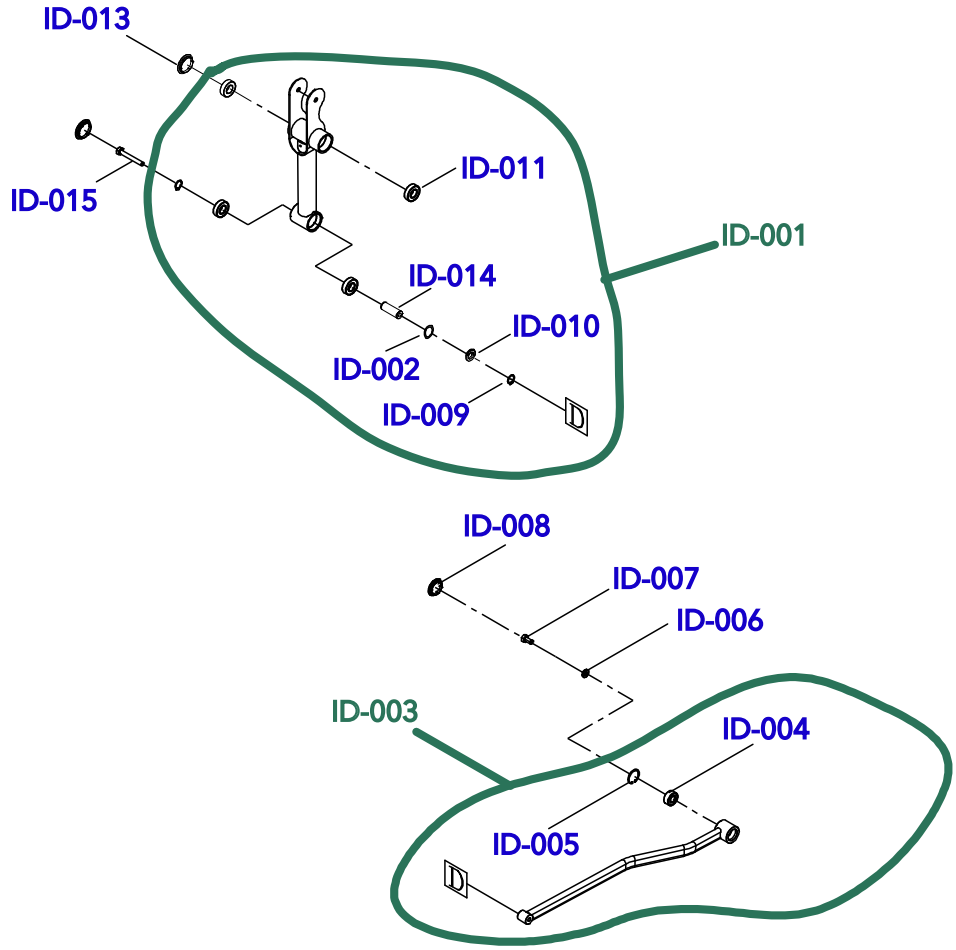

Parts List

Item	Alpha Code	Part Number	Description (Quantity)
ID-001	E1X	REX3EA7	Left Coupler Assembly *see Note 1*
ID-002	E1X	REX0JB7	Wave Washer
ID-003	E1X	REX3EA9	Right or Left Idler Assembly *see Note 2*
ID-004	E1X	REX2BKA	Bearing
ID-005	E1X	REX0JDZ	Retaining Ring
ID-006	E1X	REX0J4R	Flat Washer
ID-007	E1X	REX2DVG	Idler Mtg. Bolt
ID-008	E1X	REX3E9C	Idler End Cap
ID-009	E1X	REX0JEG	C-Ring
ID-010	E1X	REX2NDD	Spacer Washer
ID-011	E1X	REX0HVP	Ball Bearing (4 Per Coupler)
ID-012	E1X	REX3EA8	Right Coupler Assembly (*see Note 1*) ***(Not shown)***
ID-013	E1X	REX3E98	Coupler End Cap (2 Per Coupler)
ID-014	E1X	REX2LJZ	Link Axle
ID-015	E1X	REX2MJK	Hex Bolt

Note 1: Coupler Asemblies (right and left) consist of: Coupler Weldment, Bearings, Link Axle, Washers, Retaining Ring

Note 2: Idler Assembly consists of Idler Weldment and Items ID-004, -005

Crank Related Components

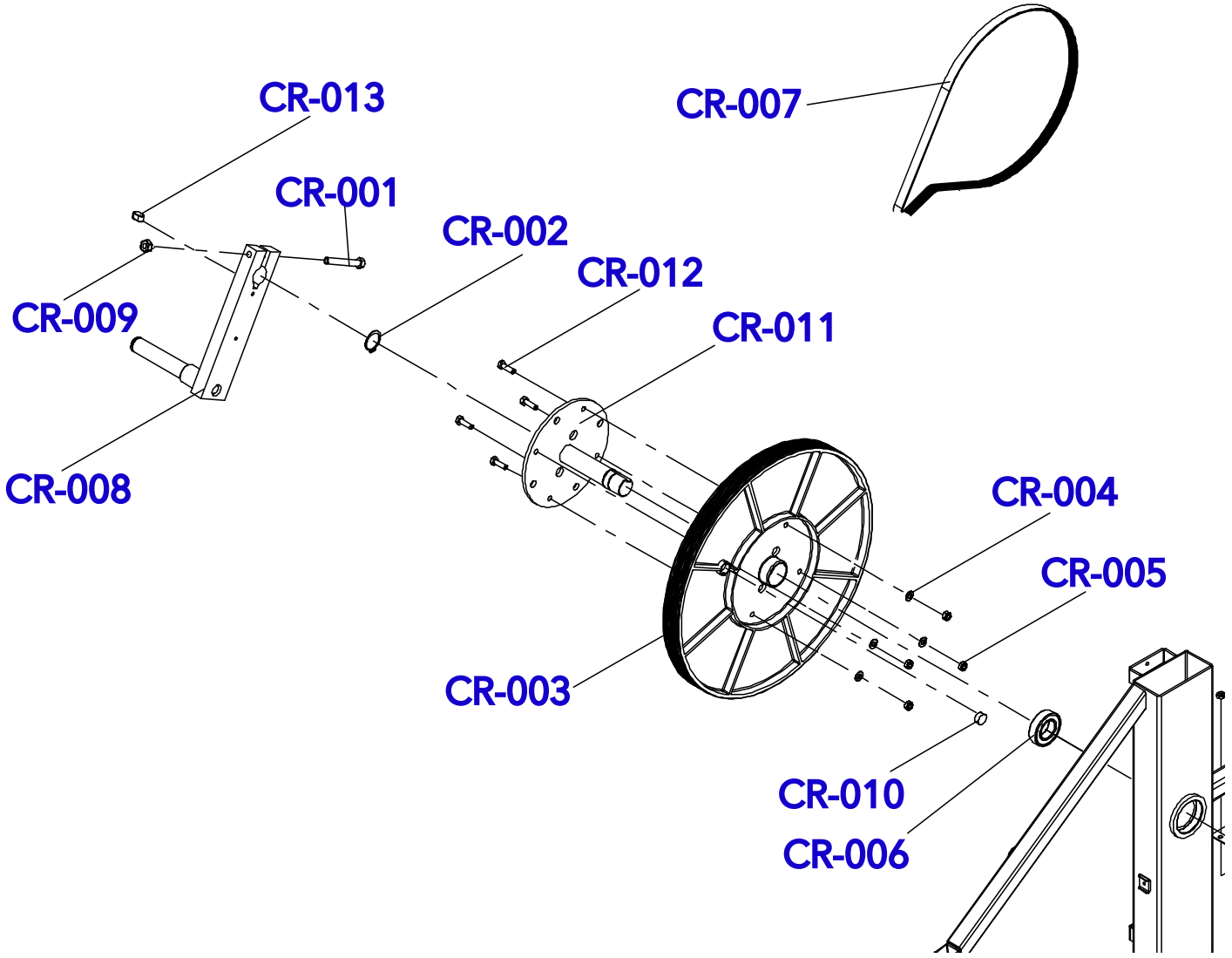

Parts List

Item	Alpha Code	Part Number	Description (Quantity)
CR-001	E1X	REX21NS	Hex Bolt (1 Per Crank Arm)
CR-002	E1X	REX0JEJ	Retaining Rings (3)
CR-003	E1X	REX218N	Crank Pulley
CR-004	E1X	REX0J6P	Flat Washer (4)
CR-005	E1X	REX0KR3	Lock Nut (4)
CR-006	E1X	3225301	Frame Bearing (2)
CR-007	E1X	REX2T9F	Drive Belt
CR-008	E1X	REX2LL2	Right or Left Crank Arm Weldment
CR-009	E1X	REX22RP	Nylock Nut (1 Per Crank Arm)
CR-010	E1X	REX01H5	Magnet
CR-011	E1X	REX2LL1	Crank Axle Weldment
CR-012	E1X	REX21NT	Hex Bolt (4)
CR-013	E1X	REX0JGQ	Hex Key (1 Per Crank Arm)

Brake & Tensioner Components

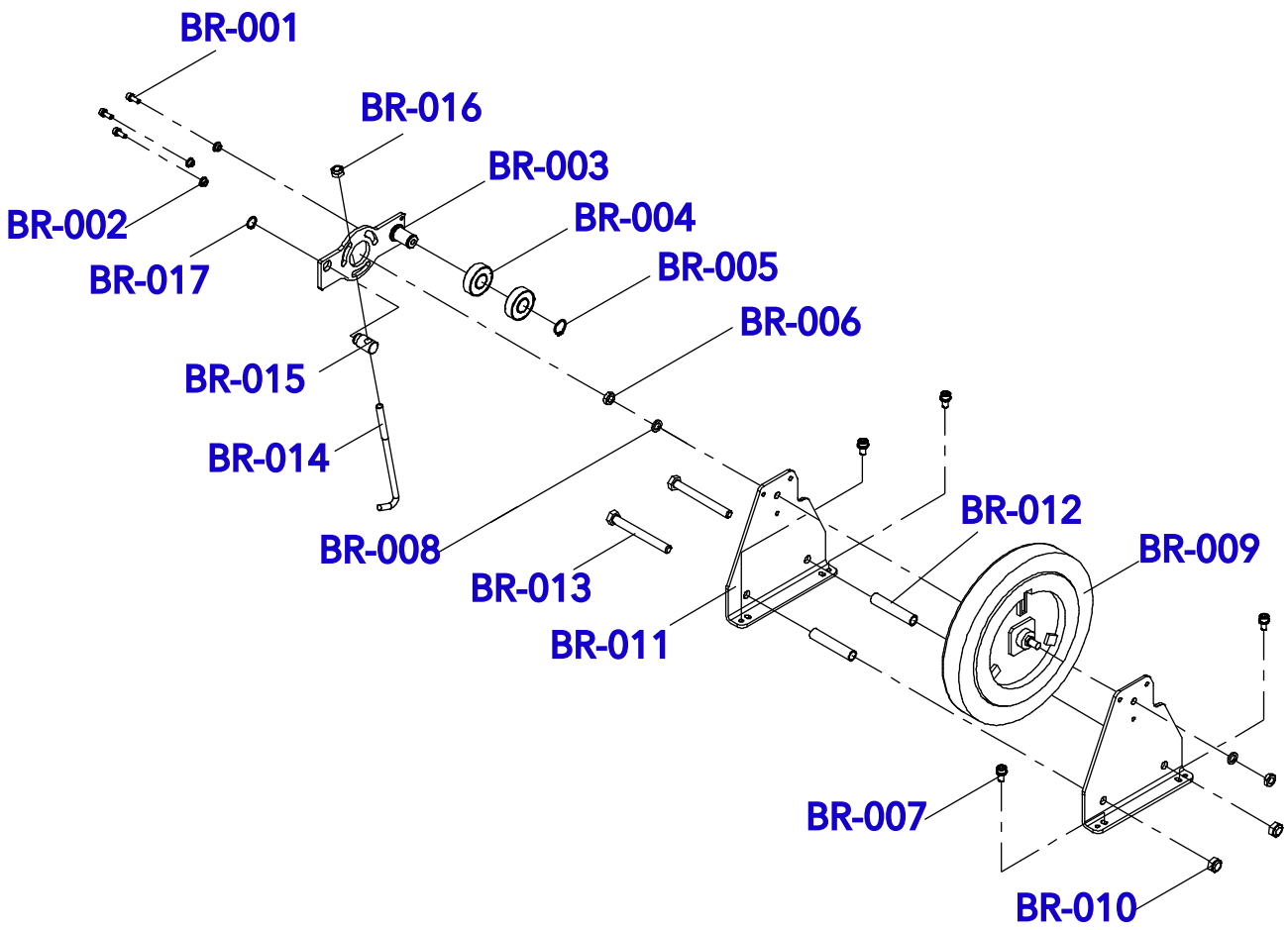

Parts List

Item	Alpha Code	Part Number	Description (Quantity)
BR-001	E1X	REX0K2W	Socket Head Cap Screw Brake Mtg.Screw (3)
BR-002	E1X	REX21X8	Tensioner Spacer (3)
BR-003	E1X	REX3535	Bracket, Belt Tensioner
BR-004	E1X	REX2KX8	Bearing (2)
BR-005	E1X	REX0JEG	C-Ring
BR-006	E1X	REX20W4	Hex Nut (2)
BR-007	E1X	REX25ZJ	Cap Screw (4)
BR-008	E1X	REX0J93	Spring Washer
BR-009	E1X	REX21BJ	Brake Assembly
BR-010	E1X	REX0KR0	Lock Nut (2)
BR-011	E1X	REX21LF	Brake Mtg. Bracket (2)
BR-012	E1X	REX21LG	Collar Spacer (2)
BR-013	E1X	REX21NP	Hex Bolt (2)
BR-014	E1X	REX21A6	Hook Clamp Bolt
BR-015	E1X	REX21A7	Swivel Stud
BR-016	E1X	REX0KR5	Nut, Nylock
BR-017	E1X	REX22LR	C-Ring

Stabilizer Components & Grommets

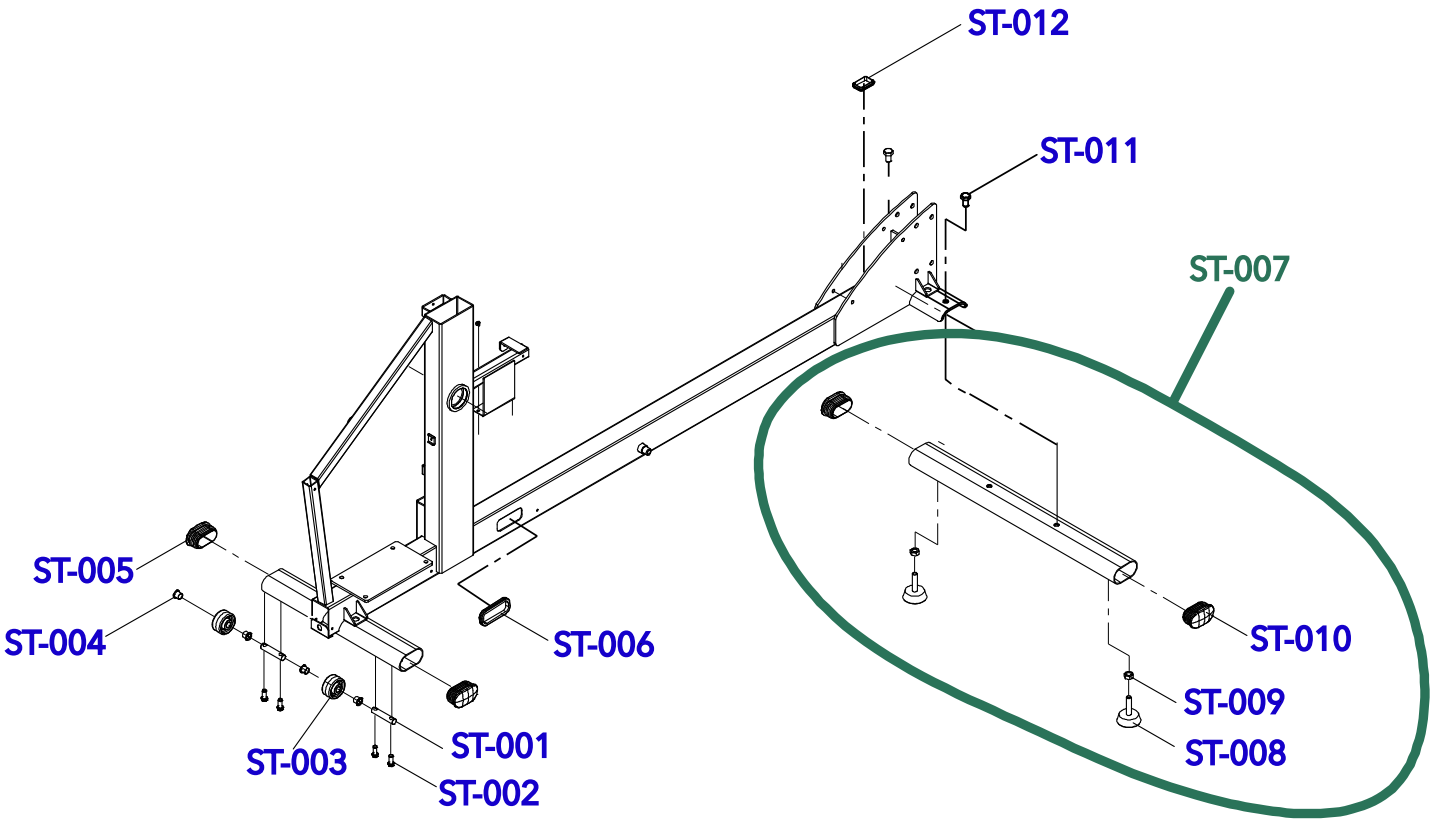

Parts List

Item	Alpha Code	Part Number	Description (Quantity)
ST-001	E1X	REX2S4Q	Axle
ST-002	E1X	REX0K0B	Car Screw (2 Per Wheel)
ST-003	E1X	REX2S4R	Transport Wheel
ST-004	E1X	REX2LNW	Bushing (2 Per Wheel)
ST-005	E1X	REX35JK	Rear Stabilizer End Cap (2)
ST-006	E1X	REX2T6K	Grommet
ST-007	E1X	REX3EA2	Front Stabilizer Assembly - see Note below
ST-008 *	E1X	REX2NFK	Leg Leveler (2)
ST-009 *	E1X	REX2T9D	Hex Nut (2)
ST-010 *	E1X	REX35JK	Front Stabilizer End Cap (2)
ST-011	E1X	REX3JNN	Hex Bolt (2)
ST-012	E1X	REX2LUH	Grommet

Note: Includes Items in asterisk (*). These components can be ordered separately.

Motor, Reed Switch & Cables

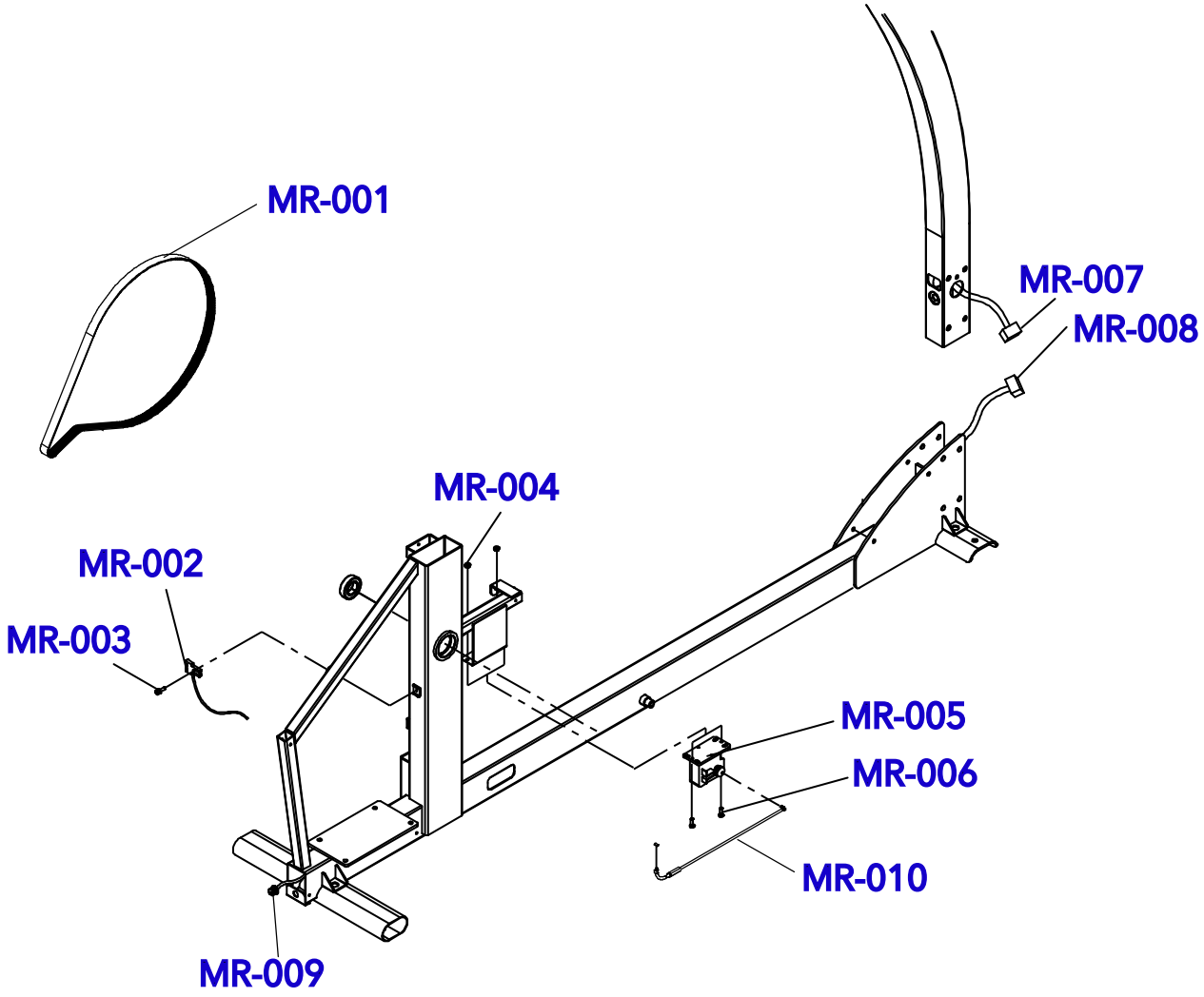

Parts List

Item	Alpha Code	Part Number	Description (Quantity)
MR-001	E1X	REX2T9F	Drive Belt Poly-V
MR-002	E1X	REX01J8	Reed Switch
MR-003	E1X	REX0K28	Reed Switch Cap Screw
MR-004	E1X	REX0KMR	Motor Mtg. Nut (2)
MR-005	E1X	REX01HL	DC Resistance Motor
MR-006	E1X	REX0KEH	Motor Mtg. Screw (2)
MR-007	E1X	REX2G7S	Wire Harness, Upright
MR-008	E1X	REX2GHY	Wire Harness, Base
MR-009	E1X	REX2K86	Wire Harness, Transformer to Base Harness
MR-010	E1X	REX01QH	Brake Cable, Mechanical

Wiring Diagram

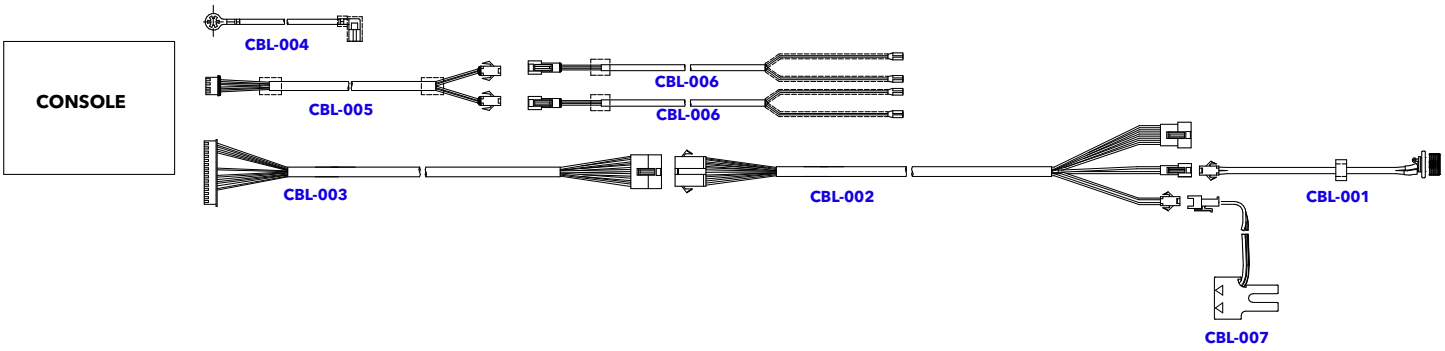

Parts List

Item	Alpha Code	Part Number	Description (Quantity)
CBL-001	E1X	REX2K86	Cable, CT Power Connector
CBL-002	E1X	REX2GHY	Cable, CT Base
CBL-003	E1X	REX2G7S	Cable Assy, Upright
CBL-004	E1X	REX2R27	Cable Assy, Ground
CBL-005	E1X	REX2LQH	Cable Assy, HR Sensor to Console
CBL-006	E1X	REX2S5A	Wire Harness HR Handlebar
CBL-007	E1X	REX01J8	Switch, Reed, RPM Sensor