HORIZON FITNESS

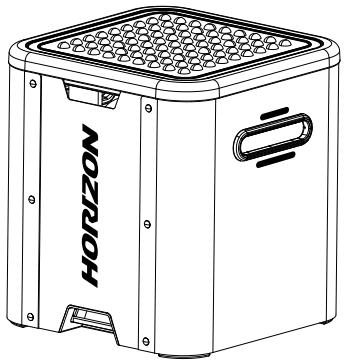

OWNER'S MANUAL

IMPORTANT SAFETY INSTRUCTIONS SAVE THESE INSTRUCTIONS READ ALL INSTRUCTIONS BEFORE USING THIS EXERCISE EQUIPMENT.

- Keep children under the age of 14 away from this strength training equipment. Teenagers must be supervised at all times while using this equipment.
- This equipment is not intended for use by persons with reduced physical, sensory or mental capabilities, or lack of experience and knowledge, unless they have been given supervision or instruction concerning use of the equipment by a person responsible for their safety.
- All warnings and instructions should be read and proper instruction obtained prior to use. Use this equipment for its intended purpose ONLY.
- Inspect the machine before use. DO NOT use machine if it appears damaged or inoperable.
- Do not exceed weight capacity of this equipment.
- Make sure all adjustment devices are fully inserted and properly adjusted before use to avoid injury.
- Injuries to health may result from incorrect or excessive training. Cease exercise if you feel faint or dizzy. Obtain a medical exam before beginning an exercise program.
- Keep body, clothing, hair, and fitness accessories free and clear of all moving parts.
- Make sure machine is stabilized on the floor and uneven surfaces are leveled before use.
- It is essential that your equipment is used only indoors, in a climate controlled room.
- Do not Drop dumbbells and kettlebell to the floor.
- Always fully stow all accessories between workouts. This helps keep you and everyone in your household safe, and helps preserve longevity of your equipment.
- To assure that the safety level of this product is maintained, examine components for wear and tear on a regular basis. Components that are worn excessively or inoperable should be replaced immediately or the product should be put out of use until it is repaired.
- This application is only for indoor use at home, not recommend to use in commercial environment.

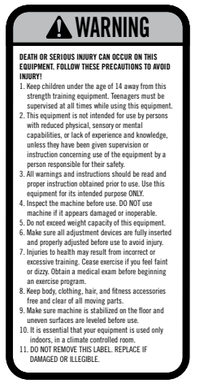

CAUTION!

If you experience chest pains, nausea, dizziness or shortness of breath, stop exercising immediately and consult your physician before continuing.

WHAT'S INCLUDED

- ☐ Cube X 1
- ☐ Dumbbell Handle X 2
- ☐ Weight Plate X 12
- ☐ Collar X 4
- ☐ Resistance Band X 1 Set
- ☐ Kettlebell Handle X 1

Cube

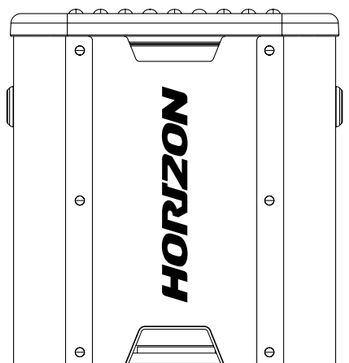

TECH SPECS	
Assembled Dimensions (L x W x H)	40 x 40 x 45 cm / 15.7" x 15.7" x 17.7"
Product Weight	Cube only: 13 kg / 28.6 lbs. Total: 40 kg / 88.2 lbs.
Max User Weight	130 kg / 286 lbs.



Dumbbell Handle
(3.5 kg / 7.7 lb) *2

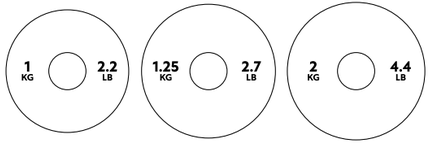

Weight Plate
(1 kg / 2.2 lb) *4, (1.25 kg / 2.7 lb) *4, (2 kg / 4.4 lb) *4



Collar *4

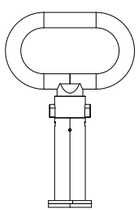

Kettlebell Handle
(3.5 kg / 7.7 lb) *1



Resistance Band
(4.5 kg / 10 lb, 11.3 kg / 25 lb, 15.8 kg / 35 lb) *1 Set each

CUBE INFO

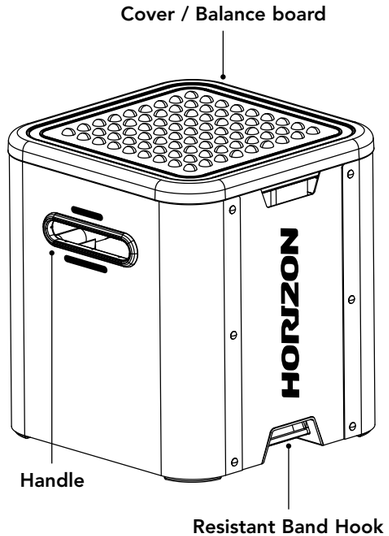

STORE YOUR EQUIPMENT

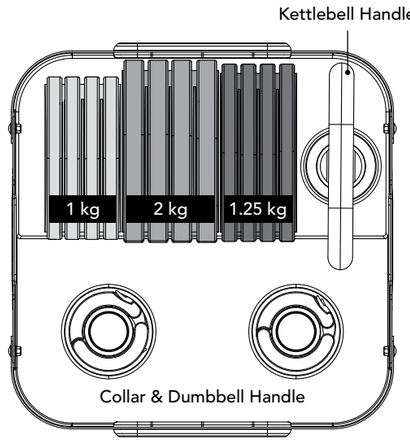

LOCATION OF THE WEIGHT CUBE

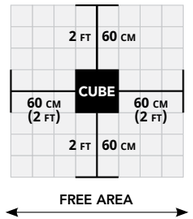

Place the Cube on a level and stable base. There should be 2 feet (60 cm) of free space each side surrounding the Cube.
Do not place the Cube in any area that will block any vent or air openings. The Cube should not be located in a garage, covered patio, near water or outdoors.

⚠ WARNING

To reduce the risk of injury, use extreme caution while moving the Cube. Do not attempt to move it over uneven surfaces and make sure there's a safety space of 20 inches (51 cm) minimum to other equipment nearby is strongly recommended.

GET START

KETTLEBELL

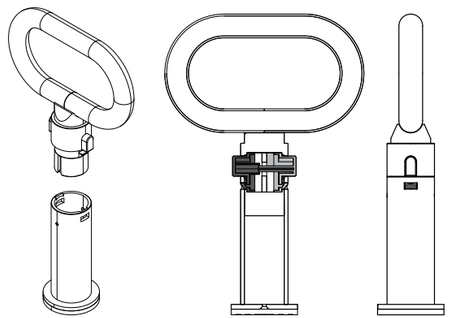

- Press the side button to detach the handle part.
- Assemble the weight plate and collar.
- Insert the handle part, till your hear a click sound.
- Make sure the handle part is assemble properly.

GET START

COLLAR

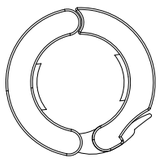

Collars are intended to keep added weight plates from sliding off of your **kettlebell and dumbbell**. Ensure collars are securely placed and latched on the **kettlebell and dumbbell**.

Incomplete placement can result in collar malfunction.

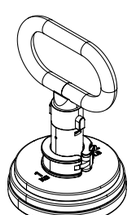

* Please load plate order by big to small & bottom to top for better and safer workout experience.

USE COVER AS BALANCE BOARD

- Cube's cover could be use as balance board for balance exercise & stretch.
- Only use these products on a dry surface free of any obstacles.
- Make sure you have enough space to step on/off.
- Always maintain proper upright posture with your head up, back straight and knees slightly bent. Keep your eyes focused straight ahead. Feel the movement you are going through. Do not stare down at the ground or at your feet as this may lead to loss of balance.



GET START

atZone

- Cube's dumbbell and kettlebell can interaction with atZone through the camera on your smart device, scan the QR code for more information
- Please search for **atZone** in the store.
  App Store, Google Play
- Compatible version:
  - iOS14 or later
  - Android: Android Lollipop (5.1) or later
- Scan the QR code below to start your workout and register your equipment

CONDITIONING GUIDELINES

STRETCH FIRST
Before using your product, it is best to take a few minutes doing a few gentle stretching exercises. Stretching prior to exercise will improve flexibility and reduce chances of exercise related injury. Ease into each of these stretches with a slow gentle motion. Do not stretch to the point of pain. Make sure not to bounce while doing these stretches.



1. STANDING CALF MUSCLE STRETCH
Stand near a wall with the toes of tour left foot about 18" from the wall, and the right foot about 12" behind the other foot. Lean forward, pushing against the wall with your palms. Keep your heels flat and hold this position for a count of 15 seconds. Make sure that you do not bounce while stretching. Repeat on the other side.

2. STANDING QUADRICEPS STRETCH
Using a wall to provide balance, grasp your left ankle with your left hand and hold your foot against the back of your thigh for 15 seconds. Repeat with your right ankle and hand.



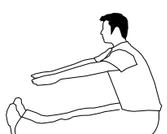

3. SITTING HAMSTRING & LOWER BACK MUSCLE STRETCH
Sit on the floor with your legs together and straight out in front of you. Do not lock your knees. Extend your fingers towards your toes and hold for a count of 15 seconds. Make sure that you do not bounce while stretching. Sit upright again. Repeat one time.

TROUBLESHOOTING

Problem	Solution
Bench makes a squeaking or chirping noise	Verify the following: 1) The Bench is on a level surface. 2) Loosen all leveling feet bolts attached during the assembly process, grease the threads, adjust and tighten again.
Dumbbell / Kettlebell will not turn to change the weight	1) The handle must be returned to the base to change the weight. 2) Check whether the safety positioning pin of the base is covered with dirt or foreign objects, keep it clean if necessary. 3) If the safety positioning pin of the base is damaged, please contact the local CUSTOMER TECH SUPPORT.

NEED HELP?

If you have questions or if there are any missing parts, contact Customer Tech Support.

MAINTENANCE

The safety considerations designed into the Bench Set can only be maintained when the equipment is regularly examined for damage and wear. Inoperable components should be replaced or the equipment should be put out of use until it is repaired.

The Bench Set is a very low maintenance product. Simply pay attention to the following maintenance points.

- Wipe down the Bench Set after each use to remove sweat and moisture. Use soap and water, or a diluted non-abrasive domestic cleaner solution. Rinse to remove detergent residue and then dry off.
- Before each session, inspect for loose components such as leveling feet or safety positioning pin prior to commencing the next use. Tighten up any loose parts.
- The mechanism of Bench Set will not require any lubrication. Should you feel it necessary to lubricate the selector mechanism, use only a silicon lubricant.

Waste Disposal
Products are recyclable.
At the end if its useful life please dispose of this article correctly and safely (local refuse sites).

©2023 Horizon Fitness