BOWFLEX

MAX TRAINER M3

OWNER'S / ASSEMBLY MANUAL



Manual en Español
Latino Americano:
www.support.nautilus.com

Table of Contents / Registration

Important Safety Instructions	3
Safety Warning Labels / Serial Number	5
Specifications	6
Before Assembly	6
Parts	7
Hardware	8
Tools	8
Assembly	9
Moving the Machine	19
Leveling the Machine	19
Features	20
Console Features	21
Resistance Level Shifter	22
Fitness Basics	25
Operations	31
Mounting / Dismounting	31
Power Up / Idle Mode	32
Manual (Quick Start) Program	33
MAX Workout Program	33
Paused / Results Mode	34
Edit a User Profile	34
Customize MAX Program	35
Console Setup Mode	36
Maintenance	37
Maintenance Parts	38
Troubleshooting	40
Body Weight Loss Guide	42
Warranty	51

To validate warranty support, keep the original proof of purchase and record the following information:

Serial Number _____

Date of Purchase _____

To register your product warranty , go to: www.bowflex.com/register or call 1 (800) 605–3369.

If you have questions or problems with your product, please call 1 (800) 605–3369.

Nautilus, Inc., 5415 Centerpoint Parkway, Groveport, OH 43125 USA, www.NautilusInc.com - Customer Service: North America (800) 605-3369, csnls@nautilus.com | Nautilus (Shanghai) Fitness Equipments Co, Ltd, Room 1701 &1702, 1018 Changning Road, Changning District, Shanghai, China 200042, www.nautilus.cn - 86 21 6115 9668 | outside U.S. www.nautilusinternational.com | Printed in China |

© 2014 Nautilus, Inc. | Bowflex, the Bowflex logo, Nautilus, the Nautilus logo, Schwinn, SelectTech, and Max Trainer are trademarks owned or licensed by Nautilus, Inc., registered or otherwise protected by common law in the U.S. and other countries. Polar®, OwnCode®, MyFitnessPal, and Nut Thins® are trademarks of their respective owners. Other trademarks are the property of their respective owners.

ORIGINAL MANUAL - ENGLISH VERSION ONLY

When using an electrical appliance, basic precautions should always be followed, including the following:

This icon means a potentially hazardous situation which, if not avoided, could result in death or serious injury.

Obey the following warnings:

Read and understand all warnings on this machine.

Carefully read and understand the Assembly instructions.

DANGER **Carefully read and understand the Assembly instructions. Read and understand the complete Manual. Keep the Manual for future reference.**

DANGER **To reduce the risk of electrical shock or unsupervised usage of the equipment, always unplug this machine from the electrical outlet immediately after using and before cleaning.**

WARNING **To decrease the risk of burns, electric shock, or injury to persons, read and understand the complete Owner's Manual. Failure to follow these guidelines can cause a serious or possibly fatal electrical shock or other serious injury.**

- Keep bystanders and children away from the product you are assembling at all times.
- Do not connect power supply to the machine until instructed to do so.
- The machine should never be left unattended when plugged in. Unplug from outlet when not in use and before cleaning, maintaining or repairing the machine.
- Before each use, examine the machine for damage to power cord, loose parts or signs of wear. Do not use if found in this condition. Contact Nautilus Customer Service for repair information.
- Not intended for use by persons with medical conditions where those conditions may impact the safe operation of the machine or pose a risk of injury to the user.
- Do not drop or put objects into any opening of the machine.
- Never operate this machine with the air openings blocked. Keep the air openings free of lint, hair and the like.
- Do not assemble this machine outdoors or in a wet or moist location.
- Make sure assembly is done in an appropriate work space away from foot traffic and exposure to bystanders.
- Some components of the machine can be heavy or awkward. Use a second person when doing the assembly steps involving these parts. Do not do steps that involve heavy lifting or awkward movements on your own.
- Set up this machine on a solid, level, horizontal surface.
- Do not try to change the design or functionality of this machine. This could compromise the safety of this machine and will void the warranty.
- If replacement parts are necessary, use only genuine Nautilus replacement parts and hardware. Failure to use genuine replacement parts can cause a risk to users, keep the machine from operating correctly and void the warranty.
- Do not use until the machine has been fully assembled and inspected for correct performance in accordance with the Manual.
- Read and understand the complete Manual supplied with this machine before first use. Keep the Manual for future reference.
- Do all assembly steps in the sequence given. Incorrect assembly can lead to injury or incorrect function.
- SAVE THESE INSTRUCTIONS.

Important Safety Instructions

Before using this equipment, obey the following warnings:

Read and understand the complete Manual. Keep the Manual for future reference.

Read and understand all warnings on this machine. If at any time the Warning stickers become loose, unreadable or dislodged, contact Nautilus Customer Service for replacement stickers.

⚠DANGER **To reduce the risk of electrical shock or usage of the equipment, always unplug the power cord from the wall outlet and the machine and wait 5 minutes before cleaning, maintaining or repairing the machine. Place the power cord in a secure location.**

- Children must not be let on or near to this machine. Moving parts and other features of the machine can be dangerous to children.
- Not intended for use by anyone under 14 years of age.
- Consult a physician before you start an exercise program or a new health and diet plan. Stop exercising if you feel pain or tightness in your chest, become short of breath, or feel faint. Contact your doctor before you use the machine again. Use the values calculated or measured by the machine's computer for reference purposes only. The heart rate displayed on the console is an approximation and should be used for reference only.
- Before each use, examine this machine for loose parts or signs of wear. Do not use if found in this condition. Monitor the Pedals and Crank Arms closely. Contact Nautilus Customer Service for repair information.
- Maximum user weight limit: 300 lbs. (136 kg). Do not use if you are over this weight.
- This machine is for home use only.
- Do not wear loose clothing or jewelry. This machine contains moving parts. Do not put fingers or other objects into moving parts of the exercise equipment.
- Set up and operate this machine on a solid, level, horizontal surface.
- Make the Pedals stable before you step on them. Use caution when you step on and off the machine.
- Do not operate this machine outdoors or in moist or wet locations.
- Keep at least 24" (0.6 m) on each side of the machine clear. This is the recommended safe distance for access and passage around and emergency dismounts from the machine. Keep third parties out of this space when machine is in use.
- Do not over exert yourself during exercise. Operate the machine in the manner described in this manual.
- Perform all regular and periodic maintenance procedures recommended in the Owner's Manual.
- Keep the Pedals clean and dry.
- Exercise on this machine requires coordination and balance. Be sure to anticipate that changes in speed and resistance level can occur during workouts, and be attentive in order to avoid loss of balance and possible injury.
- This machine cannot stop the Pedals or Upper Handlebars independently of the Resistance Fan. Reduce the pace to slow the Resistance Fan, Upper Handlebars and Pedals to a stop. Do not dismount the machine until the Pedals and Upper Handlebars have come to a complete stop.
- Do not drop or put objects into any opening of the machine.
- Prior to use read and understand the Owner's Manual. The appliance is not to be used by persons with functional limitations and impairments, reduced physical, sensory or mental capabilities, or lack of experience and knowledge.

⚠WARNING

- Injury or death is possible if caution is not used while using this machine.
- Keep children and pets away.
- Read and follow all warnings on this machine.
- Refer to the Owner's Manual for additional warnings and safety information.
- The heart rate displayed is an approximation and should be used for reference only.
- Not intended for use by anyone under 14 years of age.
- The maximum user weight for this machine is 300 lbs (136 kg.).
- This machine is for home use only.
- Consult a physician prior to using any exercise equipment.

⚠ ADVERTISSEMENT

- Une imprudence lors de l'utilisation de cet appareil pourrait être dangereuse, voire mortelle.
- Éloignez les enfants et les animaux de compagnie de l'appareil.
- Lisez et assimilez tous les avertissements apposés sur cet appareil.
- Consultez le Guide du propriétaire pour prendre connaissance des consignes de sécurité et avertissements supplémentaires.
- La fréquence cardiaque affichée est approximative et doit être utilisée uniquement à titre indicatif.
- Non destiné à des personnes âgées de moins de 14 ans.
- Le poids maximum de l'utilisateur pour cette machine est 136 kg (300 lbs).
- Cet appareil est à usage domestique uniquement.
- Consulter un médecin avant d'utiliser tout équipement d'exercice physique.

8011889_B

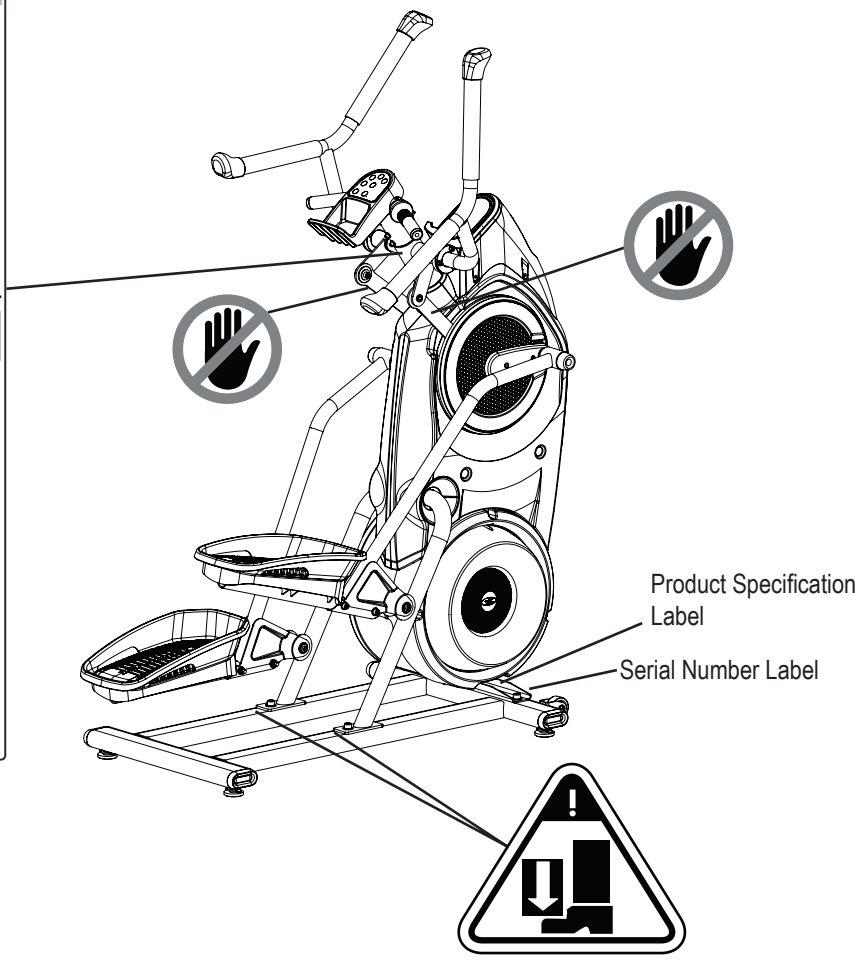

FCC Compliance

Changes or modifications to this unit not expressly approved by the party responsible for compliance could void the user's authority to operate the equipment.

The machine and power supply comply with part 15 of the FCC rules. Operation is subject to the following two conditions: (1) This device may not cause harmful interference, and (2) this device must accept any interference received, including interference that may cause undesired operation.

Note: This machine and power supply have been tested and found to comply with the limits for a Class A digital device, pursuant to Part 15 of the FCC Rules. These limits are designed to provide reasonable protection against harmful interference in a residential installation. This equipment generates, uses and can radiate radio frequency energy and, if not installed and used in accordance with the instructions, may cause harmful interference to radio communications.

However, there is no guarantee that interference will not occur in a particular installation. If this equipment does cause harmful interference to radio or television reception, which can be determined by turning the equipment off and on, the user is encouraged to try to correct the interference by one or more of the following measures:

- Reorient or relocate the receiving antenna.
- Increase the separation between the equipment and receiver.
- Connect the equipment into an outlet on a circuit different from that to which the receiver is connected.
- Consult the dealer or an experienced radio/TV technician for help.

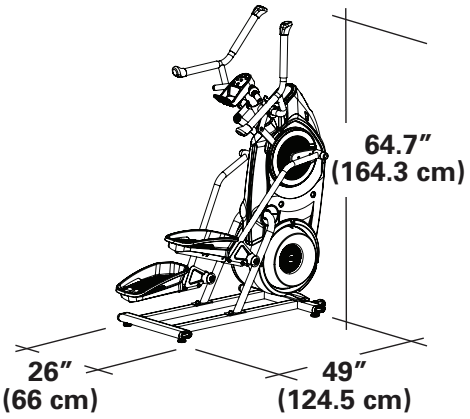

Maximum User Weight:	300 lbs. (136 kg)
Maximum Pedal Height:	19.1 inches (48.5 cm)
Power Requirements:	
Operational Voltage:	Operational Voltage 9VDC
Operating Current:	1500 mA
Regulatory Approvals:	
AC Power Adapter:	UL listed, CSA certified (or equivalent), Rated 120V 60Hz Input, 9VDC, 1500mA Output. Class 2 or LPS.

Before Assembly

Select the area where you are going to set up and operate your machine. For safe operation, the location must be on a hard, level surface. Allow a workout area of a minimum 74" (188 cm) x 97" (246.4 cm). Be sure that the workout space you are utilizing has adequate height clearance, taking into consideration the height of the user and the maximum pedal height of the fitness machine.

Basic Assembly Tips

Follow these basic points when you assemble your machine:

- Read and understand the "Important Safety Instructions" before assembly.
- Collect all the pieces necessary for each assembly step.
- Using the recommended wrenches, turn the bolts and nuts to the right (clockwise) to tighten, and the left (counterclockwise) to loosen, unless instructed otherwise.
- When attaching 2 pieces, lightly lift and look through the bolt holes to help insert the bolt through the holes.
- The assembly requires 2 people.

Machine Mat

The Bowflex™ Max Trainer™ Machine Mat is an optional accessory that helps keep your workout area clear and adds a layer of protection to your floor. The rubber machine mat provides a non-slip, rubber surface which limits static discharge and reduces the possibility of display or running errors. If possible, put your Bowflex™ Max Trainer™ Machine Mat in your selected workout area before you begin assembly.

To order the optional machine mat, go to: www.bowflex.com, or call 1 (800) 605–3369.

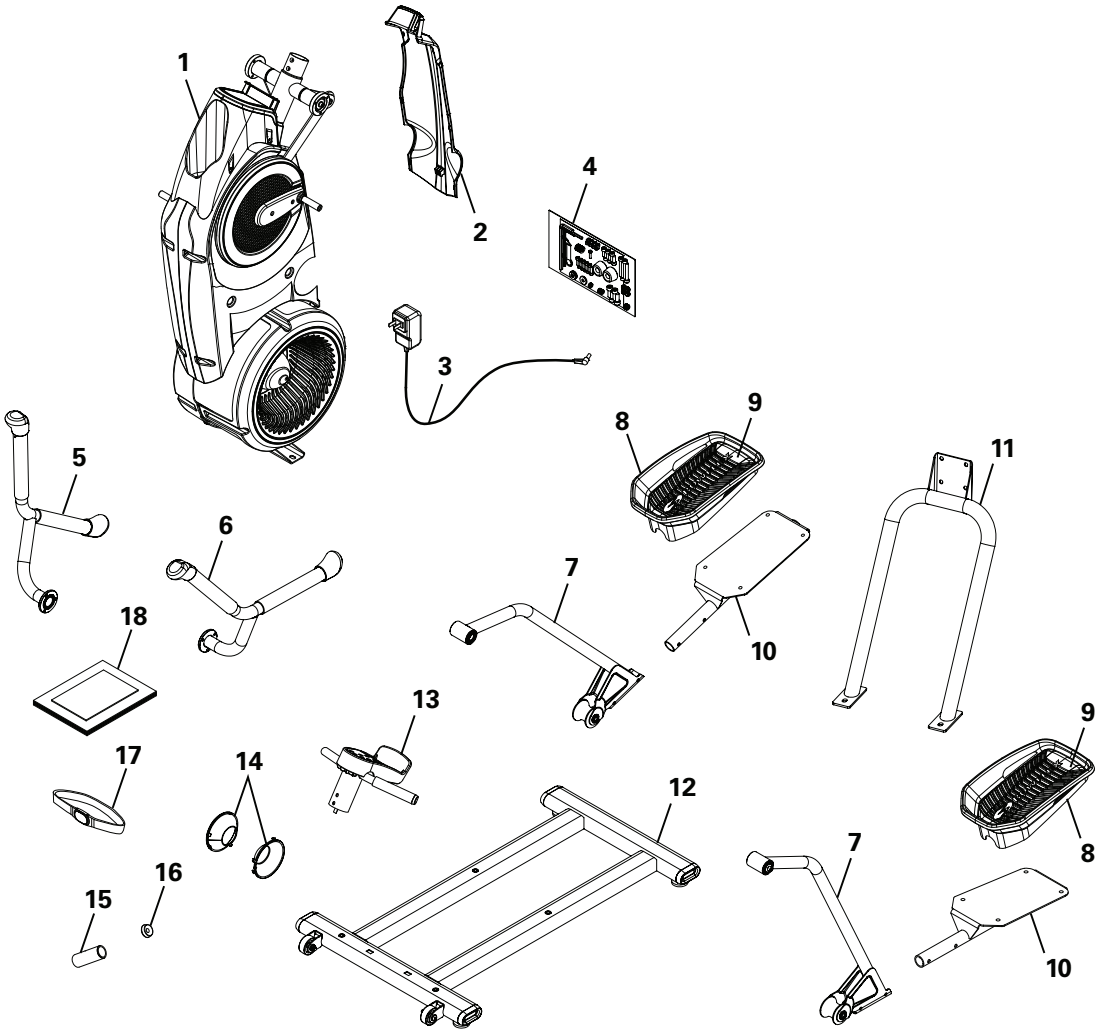

A decal has been applied to all right (“ R ”) and left (“ L ”) parts to assist with assembly.

Item	Qty	Description	Item	Qty	Description
1	1	Frame	10	2	Pedal
2	1	Shroud, Rear	11	1	Rail Assembly
3	1	AC Adapter	12	1	Stabilizer Assembly
4	1	Hardware Card	13	1	Static Handlebar Assembly
5	1	Upper Handlebar, Right	14	2	Cap
6	1	Upper Handlebar, Left	15	1	Static Handlebar Grip
7	2	Leg	16	1	Static Handlebar Cap
8	2	Foot Pad	17	1	Heart Rate Chest Strap
9	2	Foot Pad Insert	18	1	Manual Kit

Hardware / Tools

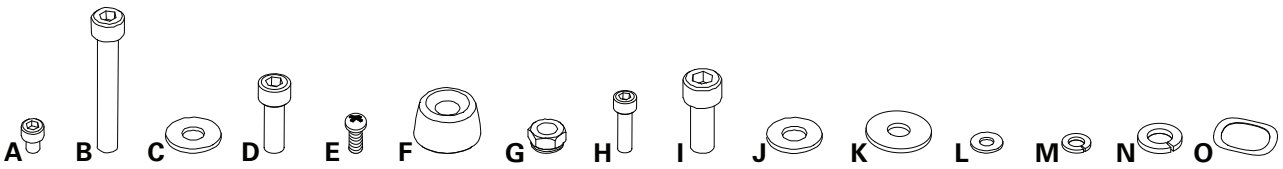

Item	Qty	Description	Item	Qty	Description
A	8	Socket Head Hex Screw, M6x1.0x8	I	4	Socket Head Hex Screw, M10x1.5x25
B	4	Socket Head Hex Screw, M8x1.25x55	J	4	Washer, Flat M10x23
C	12	Washer, Flat M8x18	K	2	Washer, Flat M8x24
D	6	Socket Head Hex Screw, M8x1.25x20	L	4	Washer, Flat M6x13
E	1	Pan Phillips Screw, M5x0.8x20	M	10	Lock Washer, M6
F	2	Cap	N	6	Lock Washer, M8
G	4	Lock Nut, M8	O	2	Wave Washer, 17.2x22
H	10	Socket Head Hex Screw, M6x1.0x20			

Note: Select pieces of Hardware have been provided as spares on the Hardware Card. Be aware that there may be remaining Hardware after the proper assembly of your machine.

Tools

Included



#2
5 mm
6 mm
8 mm



13 mm

Not Included



(recommended)



(recommended)

1. Attach Rail Assembly to Frame and then Release the Frame from the Shipping Plate

Some components of the machine can be heavy or awkward. Use a second person when doing the assembly steps involving these parts. Do not do steps that involve heavy lifting or awkward movements on your own.

NOTICE: Hand tighten hardware.

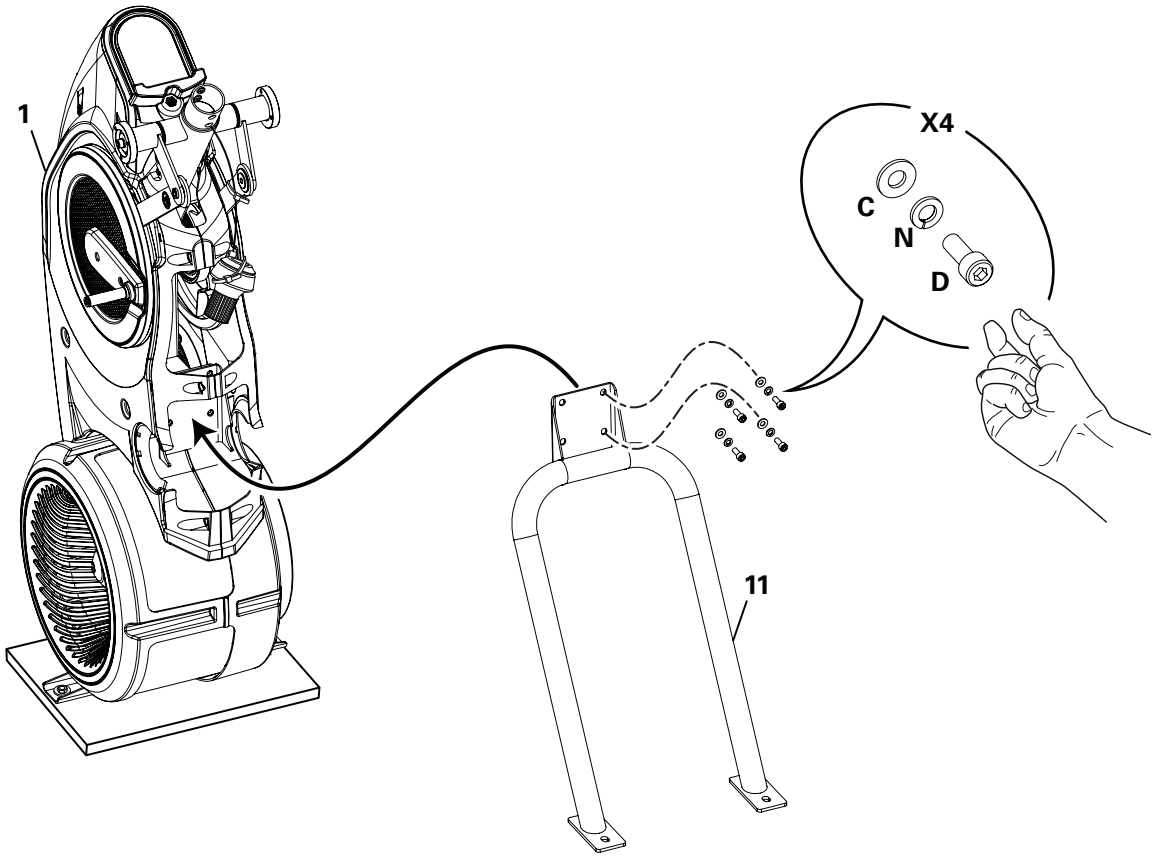

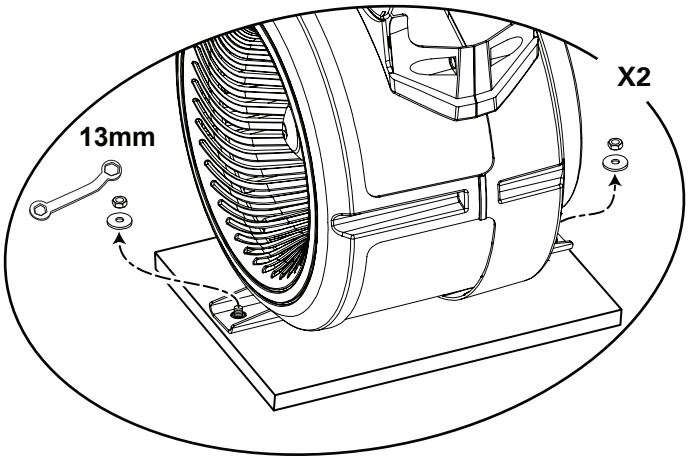

2. Carefully Lift the Frame Assembly from the Shipping Plate and Attach to the Stabilizer Assembly

Some components of the machine can be heavy or awkward. Use a second person when doing the assembly steps involving these parts. Do not do steps that involve heavy lifting or awkward movements on your own. Lift the Frame Assembly from the exterior of the pivot assembly as indicated below.

NOTICE: Once all hardware has been hand tightened, fully tighten ALL hardware from previous steps.

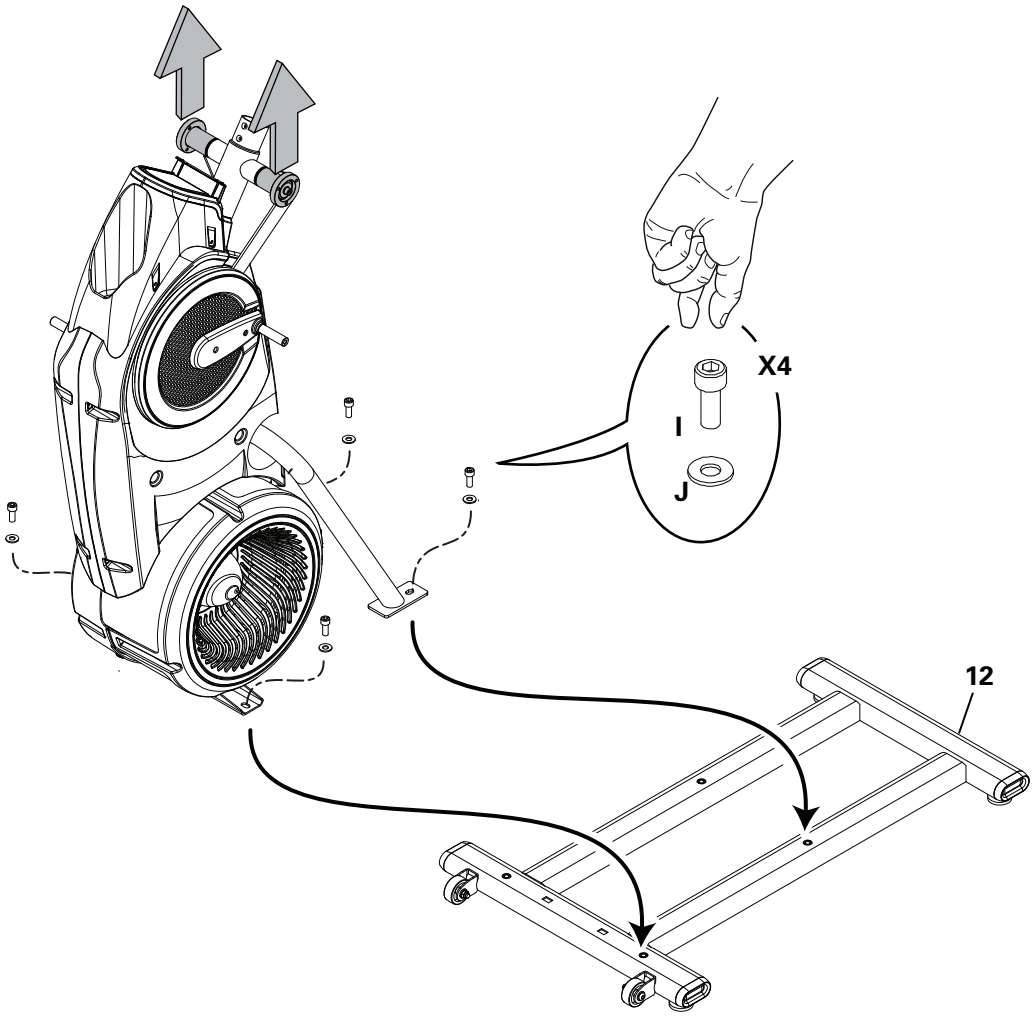

3. Cut the Shipping Zip-Ties and Attach the Rear Shroud and Caps to the Frame Assembly

NOTICE: Place the inside hook of the Rear Shroud on the Frame Assembly and then pivot it up into place.

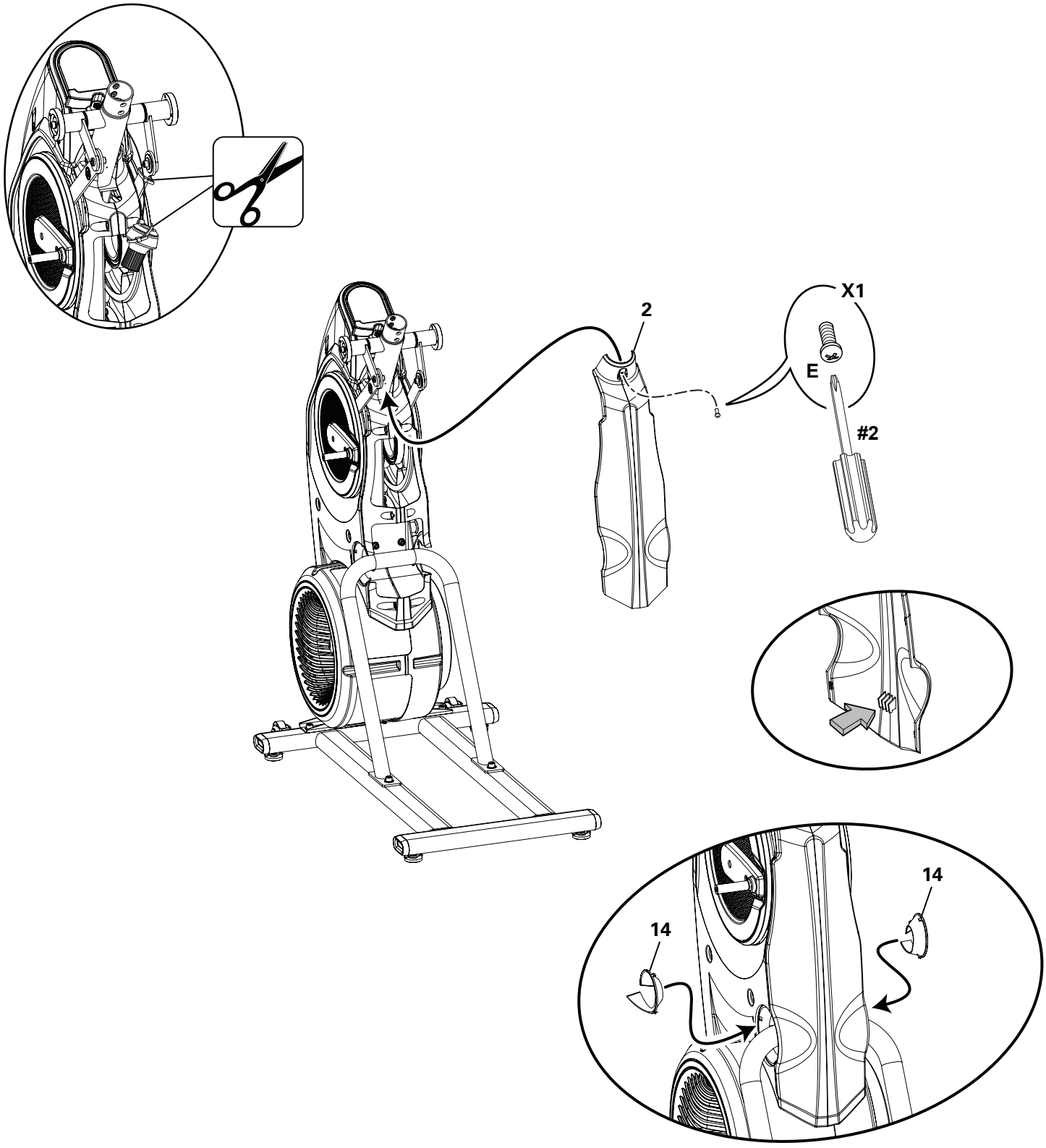

4. Attach Legs to Frame Assembly

Be aware that the Legs are connected and when either of these parts move the other does as well.

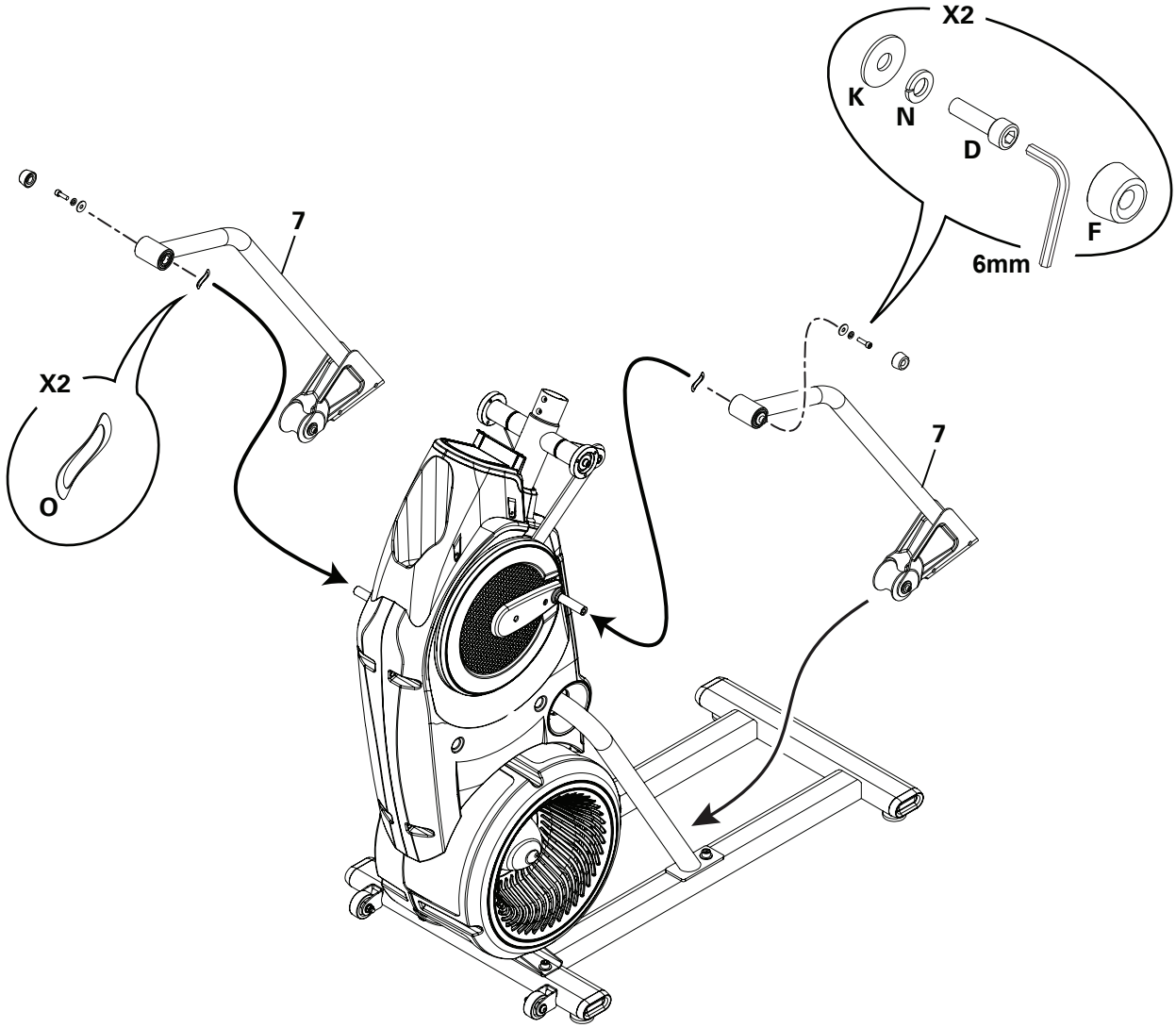

5. Attach Pedals to Frame Assembly

In order to avoid possible serious injury, when inserting the tube ends into the Leg Assemblies be careful to avoid fingers or hands being caught or pinched.

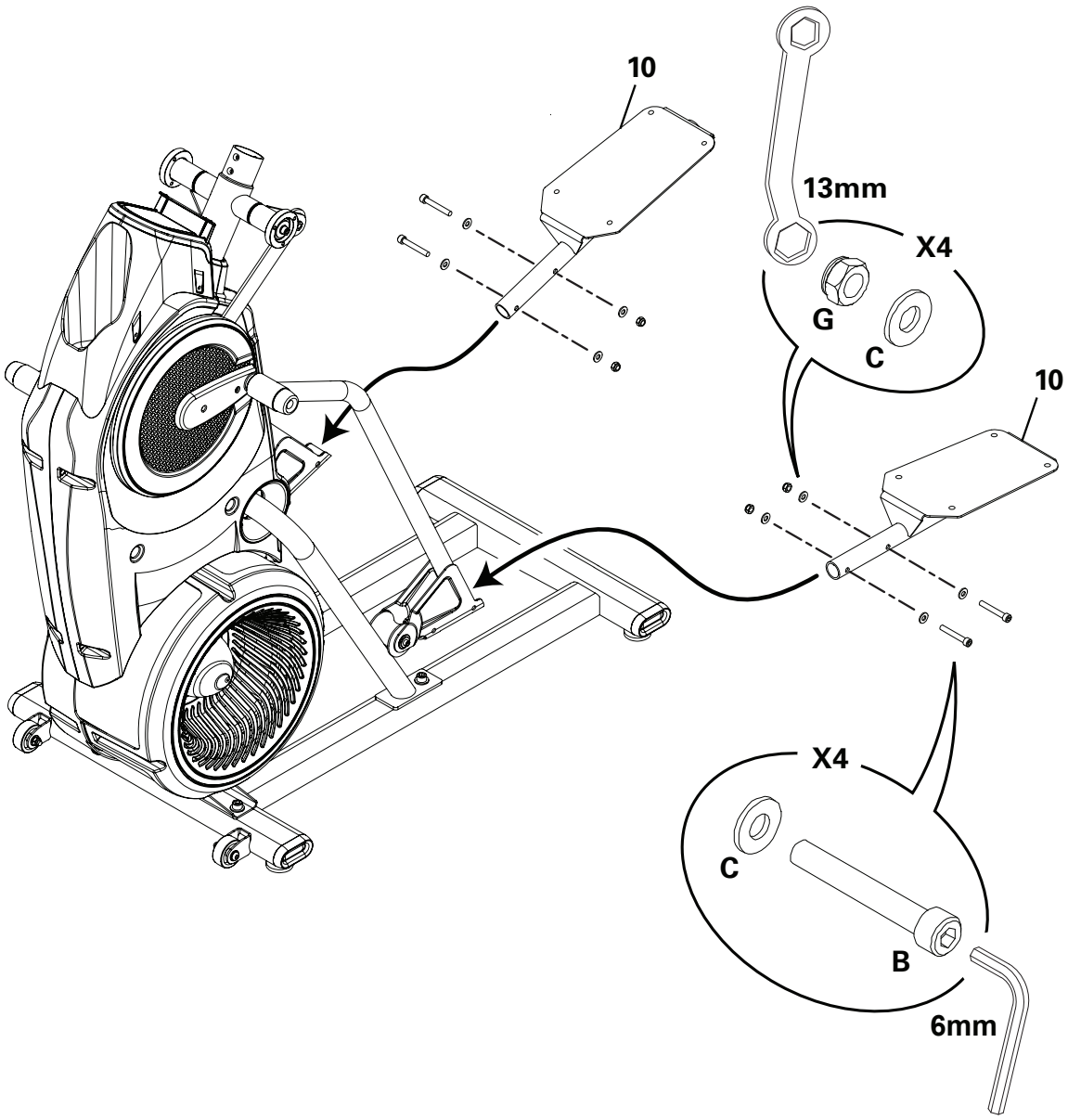

6. Connect the Foot Pads and then the Foot Pad Inserts

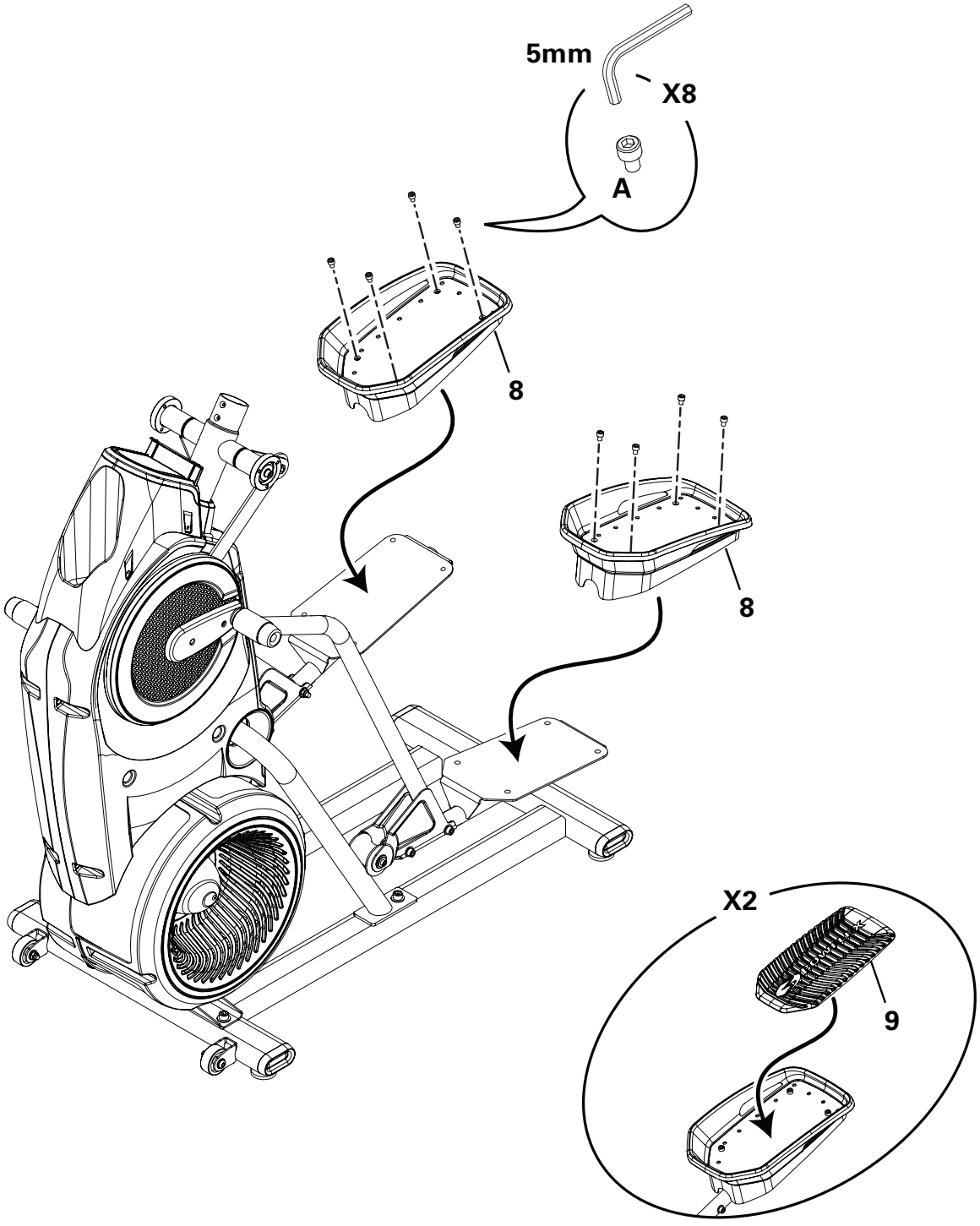

7. Attach the Upper Handlebars to Frame Assembly

Be aware that the Pedals and the Upper Handlebars are connected and when either of these parts move the other does as well. Some components of the machine can be heavy or awkward. Use a second person when doing the assembly steps involving these parts. Do not do steps that involve heavy lifting or awkward movements on your own.

NOTICE: Be sure to attach the Upper Handlebars so they can be correctly grasped by a User when on the machine.

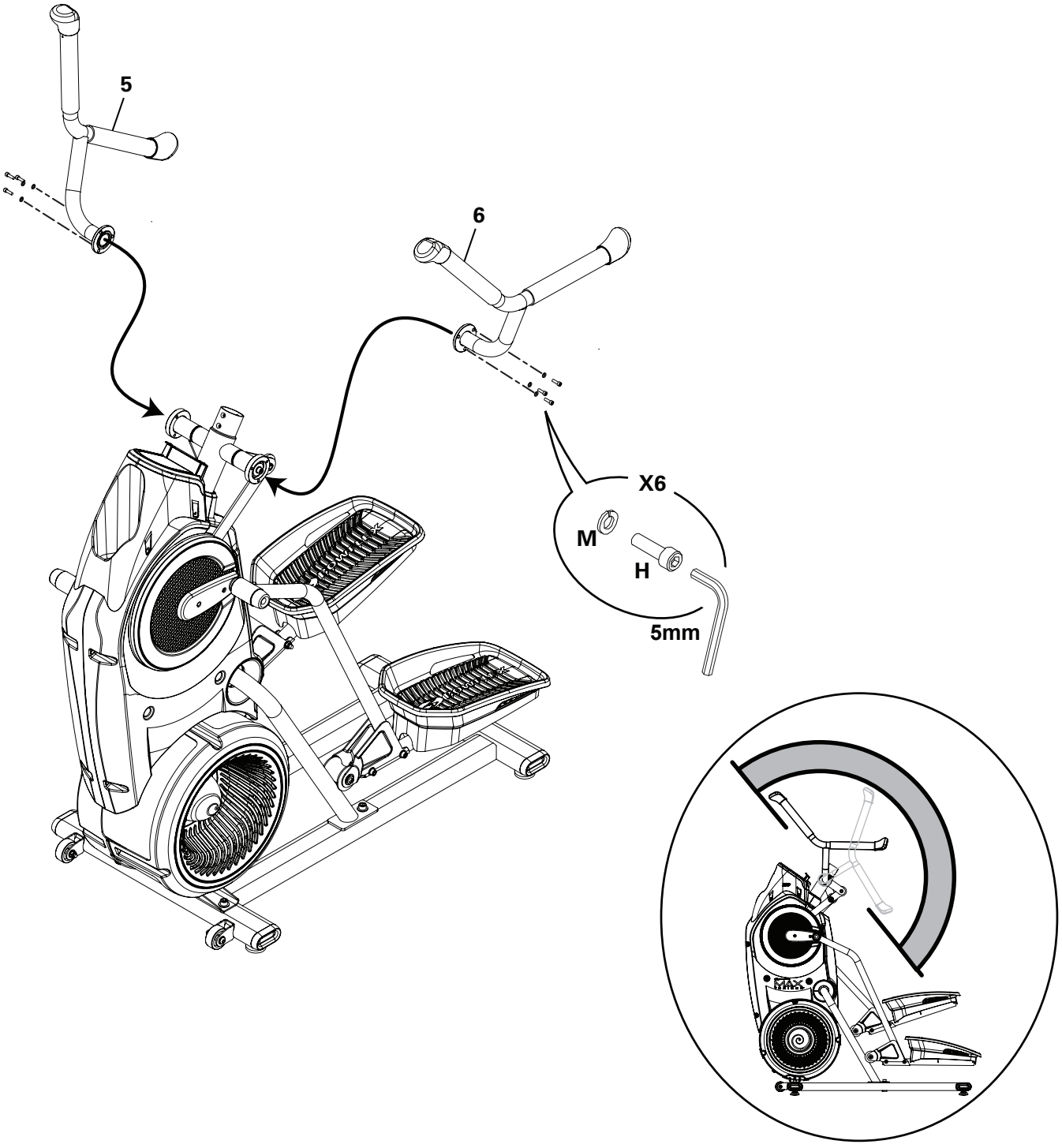

8. Connect the Static Handlebar Assembly to the Frame Assembly

NOTICE: Do not crimp the Console Cable.

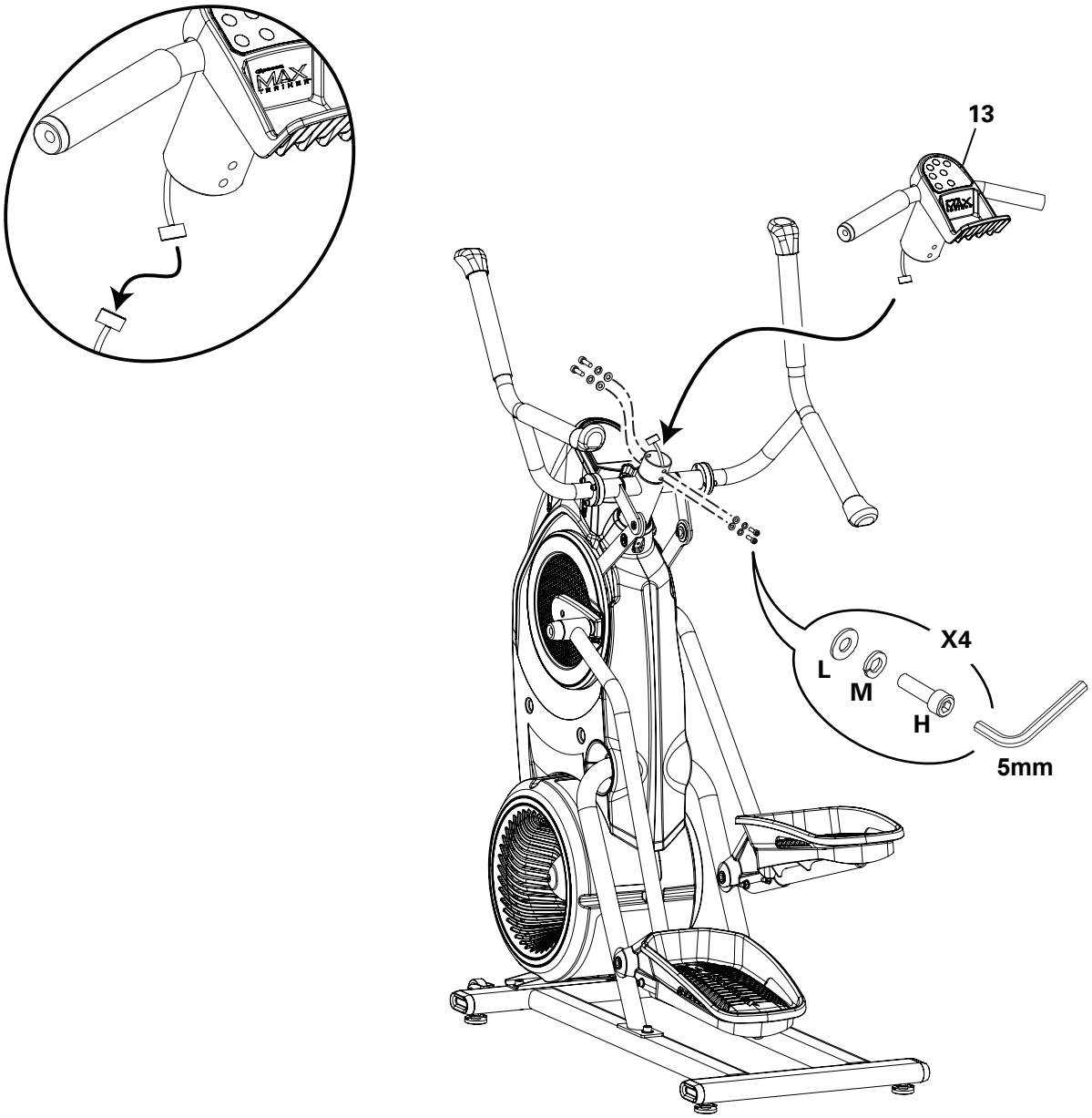

9. Attach the Shifter Assembly to the Static Handlebar and Attach the Grip

NOTICE: Do not crimp the Cable. Hardware is pre-installed and not on Hardware Card (*). Be sure the settings on the Shifter Assembly are visible to a User before fully tightening the hardware.

Note: A small application of soapy water can be used to ease the Static Handleber Grip onto the Handelbar.

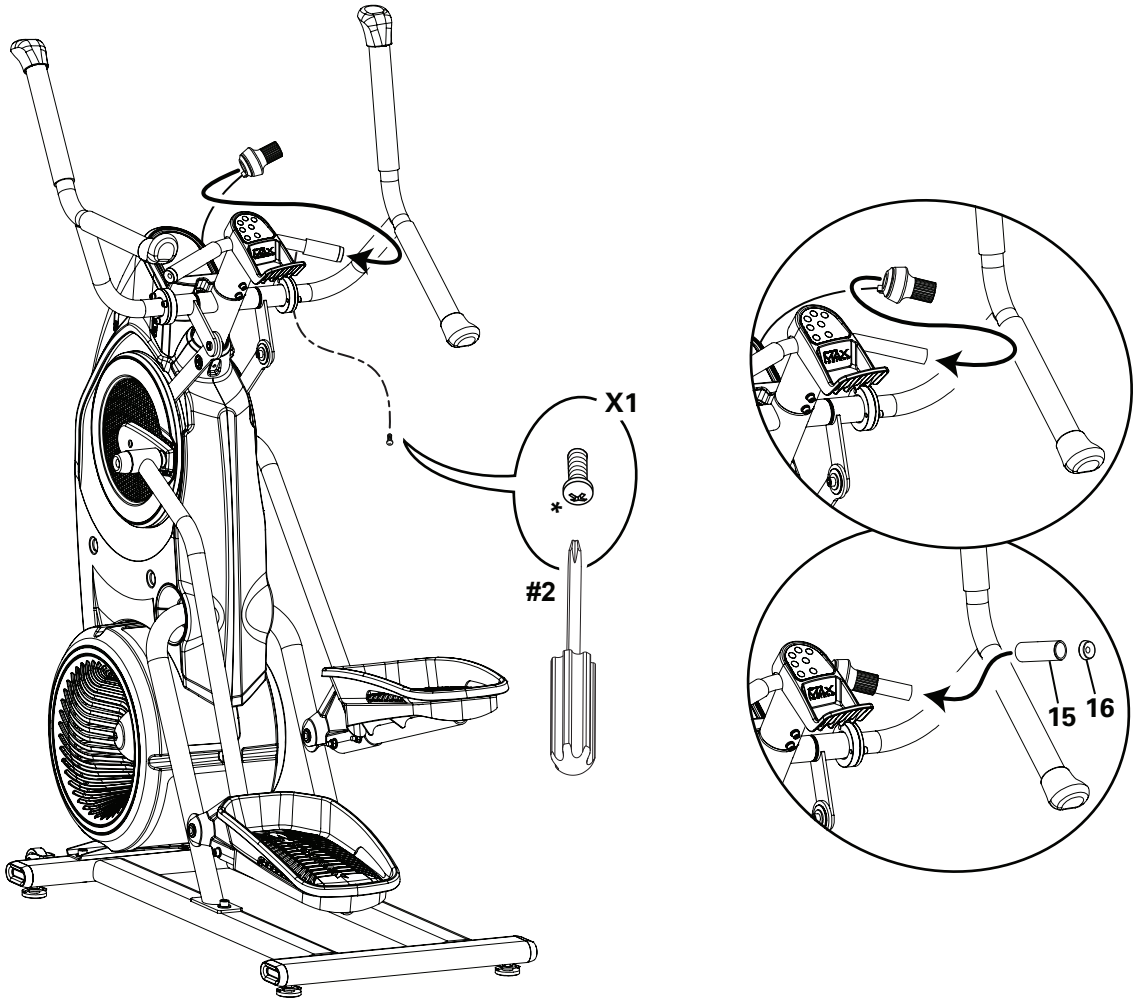

10. Connect the AC Adapter to the Frame Assembly

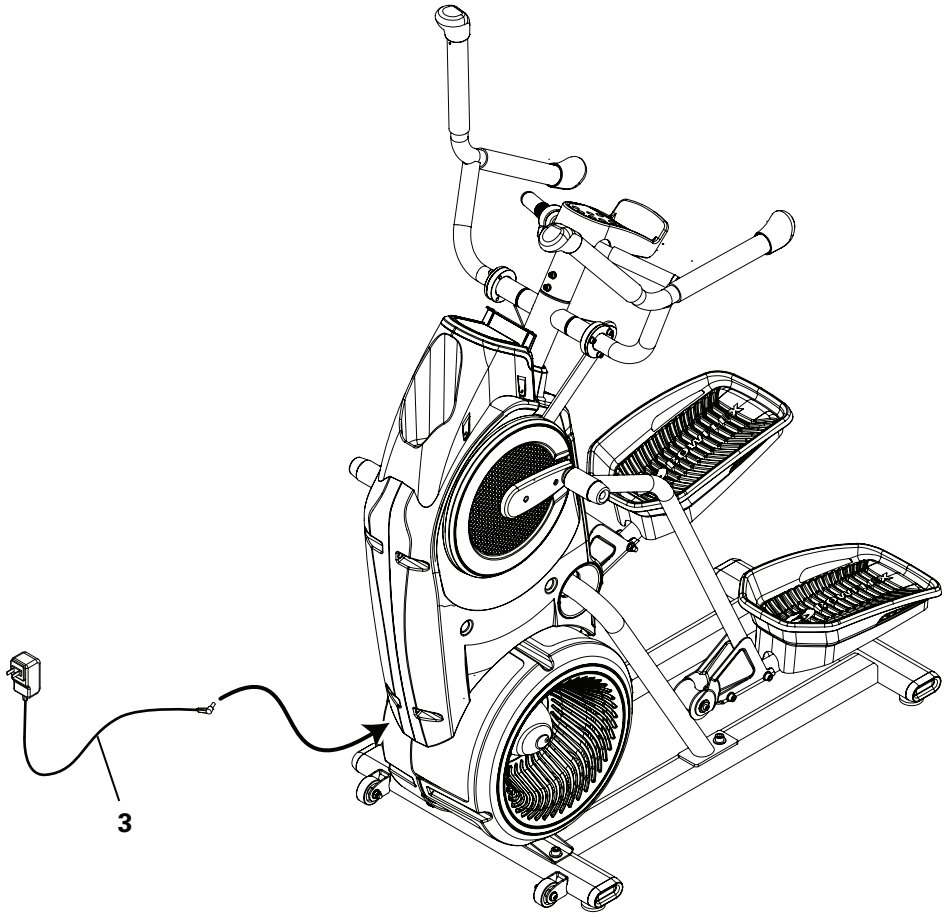

11. Final Inspection

Inspect your machine to ensure that all hardware is tight and components are properly assembled.
Be sure to record the serial number in the field provided at the front of this manual.

Do not use until the machine has been fully assembled and inspected for correct performance in accordance with the Owner's Manual.

Moving the Machine

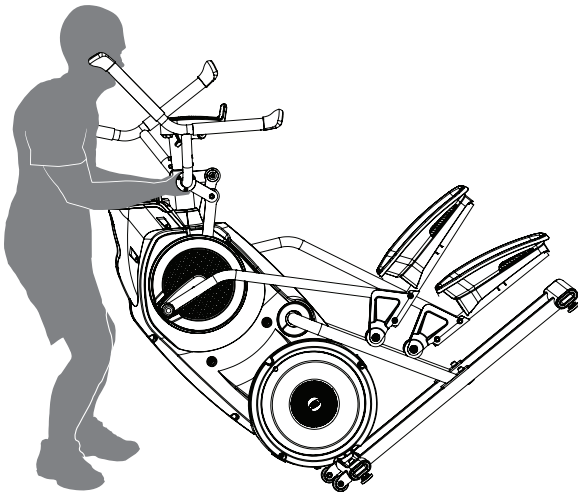

The machine may be moved by one or more persons depending on their physical abilities and capacities. Make sure that you and others are all physically fit and able to move the machine safely.

1. Grasp the inner, unmoving part of the Pivot Assembly to carefully tilt the machine toward you onto the transport rollers.

Be aware of the Handlebars and the weight of the machine before tilting the machine.

2. Push the machine into position.
3. Carefully lower the machine into position.

NOTICE: Be careful when you move the machine, abrupt motions can affect the computer operation.

Leveling the Machine

The machine needs to be leveled if your workout area is uneven or if the Rail Assembly is slightly off the floor. To adjust:

1. Place the machine in your workout area.
2. Loosen the locking nuts and adjust the levelers until they are evenly balanced in contact with the floor.

Do not adjust the levelers to such a height that they detach or unscrew from the machine. Injury to you or damage to the machine can occur.

3. Tighten the locking nuts.

Make sure the machine is level and stable before you exercise.

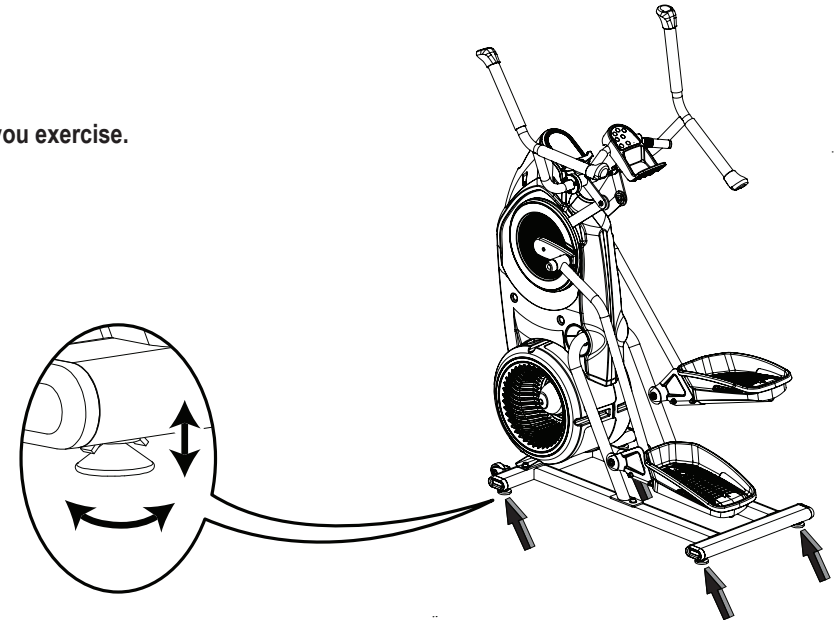

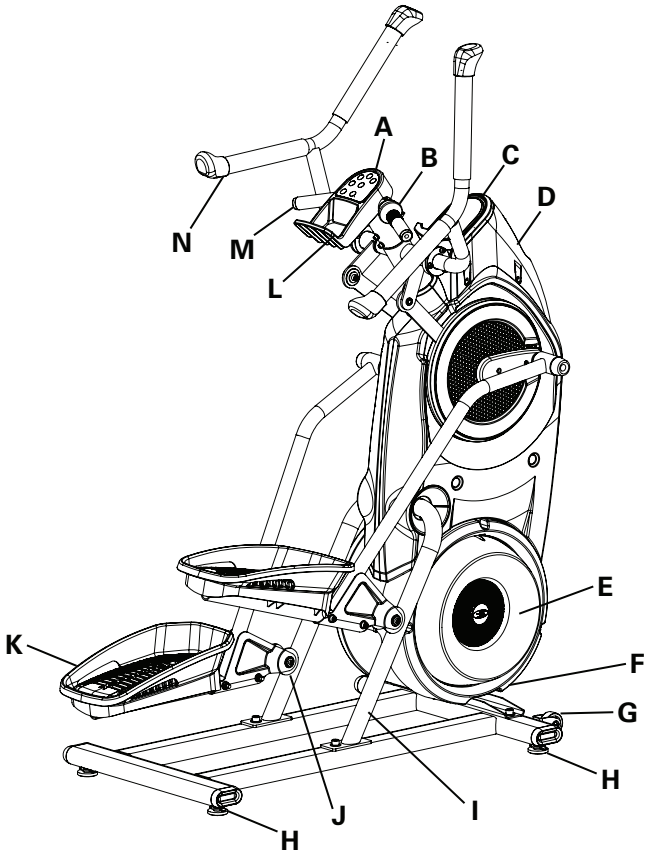

A	Console Buttons	H	Leveler
B	Resistance Level Shifter	I	Rail Assembly
C	Console Display	J	Roller
D	Water Bottle Holder	K	Pedal
E	Resistance Fan	L	Media Tray
F	Power Connector	M	Static Handlebar
G	Transport Roller	N	Upper Handlebar

⚠ WARNING **Use the values calculated or measured by the machine's computer for reference purposes only. The heart rate displayed is an approximation and should be used for reference only. Over exercising may result in serious injury or death. If you feel faint stop exercising immediately.**

Console Features

The Console provides information about your workout on the display screen.

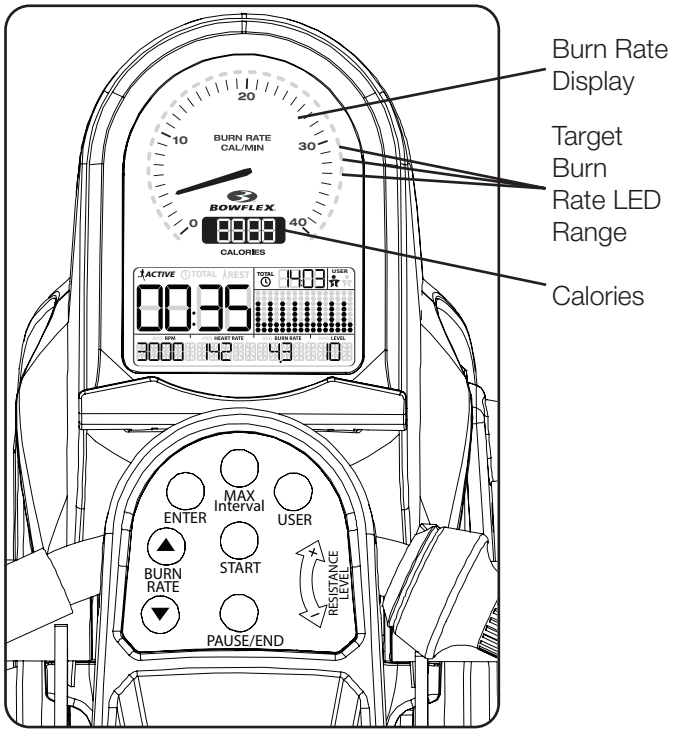

Burn Rate Display

The Burn Rate Display shows the level of calories being burned per minute. This rate is a function of the current level of RPM (pedal speed) and resistance level (1-8). As either of those values increase, the Burn Rate will increase.

Target Burn Rate LED Range

The Target Burn Rate LED Range is a workout coach based on the settings of the selected User Profile. A range of five LEDs are activated during a workout. The first of the LEDs in the range is a suggested beginner level, with the higher LEDs being for a more advanced fitness user.

Note: Be sure the User Profile is current for a more exact calorie burn rate and suggested target range.

The Target Burn Rate LED Range is a suggested workout level, and should only be followed if your physical fitness level allows.

Maximum Burn Rate LED Marker

The Maximum Burn Rate LED Marker is an orange LED that shows the highest rate of calorie burn achieved during the current workout.

Calories

The Calories display field shows the estimated calories that have been burned during the workout. The maximum display is 9999.

LCD Display Data

The console display shows the workout measurements and current options.

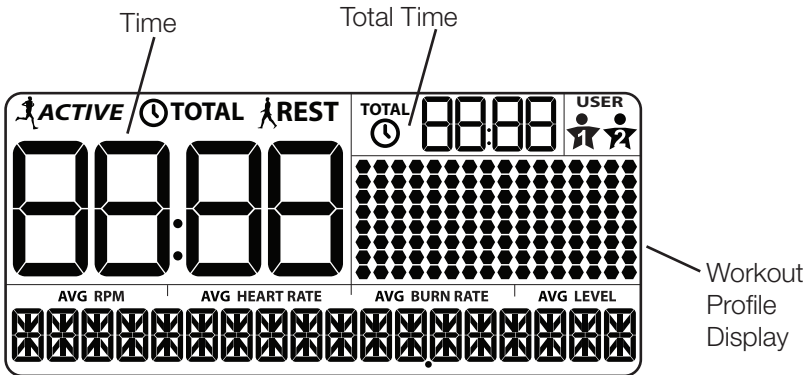

Time

The TIME display field shows the time count for the active workout. There are three types of time display depending on the style of workout: Interval, Manual, or Steady State.

ACTIVE: During an Interval workout, the TIME display will shift between the ACTIVE and REST intervals with an audible confirmation, counting the time down for the current segment. ACTIVE is the sprint, or high Intensity, segment of the Interval workout.

TOTAL: During a Manual workout, the TIME display will count up until the workout is ended.

The maximum display is 99:99. If the time count is more, the workout will be ended.

REST: During an Interval workout, the reduced workout level that counts down until the next ACTIVE segment.

Total Time

The TOTAL TIME display field shows the time count for an Interval workout. This display will be blank during a Manual workout.

User Profile
The USER PROFILE display shows the selected user profile. A user profile is always selected.

Note: For more accurate calorie counts and target Calorie Burn Rates, customize your User Profile.

Workout Profile Display
The Workout Profile Display area shows the Burn Rate profile of the program. Each column in the profile shows one interval (workout segment). The higher the column, the higher the Targeted Burn Rate of the workout. The flashing column shows the current interval.

Note: During a workout, the Workout Profile Display will not reflect updates to resistance level, only burn rate.

RPM
The RPM display field shows the machine revolutions per minute (pedal speed). The maximum display is 200.

Heart Rate
The Heart Rate display shows the heart rate in beats per minute (BPM) from the heart rate sensors. This value will not be shown if a heart rate signal is not detected.

Consult a physician before you start an exercise program. Stop exercising if you feel pain or tightness in your chest, become short of breath, or feel faint. Contact your doctor before you use the machine again. The heart rate displayed on the console is an approximation and should be used for reference only.

Burn Rate
The Burn Rate display field shows the current rate at which calories are being burned per minute. The RPM and Resistance Level directly change this rate. The User Profile settings also affect the rate (User weight).

Level
The Level display field shows the current Resistance Level (1-8). The higher the Resistance Level, the harder it will be to push the Pedals.

Keypad Functions
ENTER button- Push to accept the displayed value for the option.

MAX INTERVAL button- Push to start the MAX INTERVAL workout, push and hold for 3 seconds to edit the interval times (ACTIVE and REST) for the MAX workout program.

USER button- Push to select the desired User Profile, push and hold for 3 seconds to edit the selected User Profile.

BURN RATE Increase (▲) button- Increases the Target Burn Rate during a workout, or increases a value (time, age, weight, or height).

START button- From the WELCOME screen starts a Manual workout, starts a selected Program workout, or resumes a paused workout.

BURN RATE Decrease (▼) button- Decreases the Target Burn Rate during a workout, or decreases a value (time, age, weight, or height).

PAUSE/END button- Pauses an active workout, ends a paused workout, or goes back to the previous screen.

Resistance Level Shifter
Your Bowflex® Max Trainer® machine uses Resistance to change the intensity of your workout or to adjust the pace of the Pedals. The level of Resistance is adjusted by the Shifter on the right side of the Static Handlebar. A “1” setting is the minimum amount of resistance, the “8” is the maximum resistance. The closer the Shifter is set to the “8” setting, the more energy will be needed to move the Pedals downward.

During a workout, if you keep your RPM rate stable and increase the Pedal Resistance, your Calorie Burn Rate will increase. This results in a more intense workout.

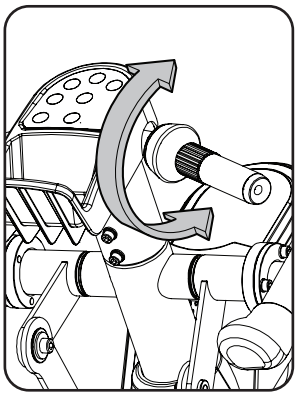

To get yourself oriented with the process, begin with the Shifter set to 4. If this setting does not allow enough Pedal travel at a casual stepping pace, adjust the Shifter toward the 1 setting until you are comfortable with the amount of travel. If you find that the Pedals move too much and you are not able to increase the stepping pace, adjust the Shifter setting toward the 8 setting, allowing less Pedal movement. The Pedals should be set so they displace enough to absorb the impact of your motion at your desired stepping pace.

Note: "Bottomed out" is when the User is unable to start a workout because the Pedals will not move. If this occurs, safely grasp the Static Handlebars and apply your weight to the heel of the higher foot. While still grasping the Static Handlebar, lean back slightly applying more weight onto the heel. Once the Pedals begin to move, resume your intended workout.

It may be helpful to note the Shifter setting for future reference when there are multiple users of the machine.

Remote Heart Rate Monitor

Monitoring your Heart Rate is one of the best procedures to control the intensity of your exercise. The Console can read telemetry Heart Rate (HR) signals from a Heart Rate Chest Strap Transmitter that operates in the 4.5kHz - 5.5kHz range.

Note: The heart rate chest strap must be an uncoded heart rate strap from Polar Electro or an uncoded POLAR® compatible model. (Coded POLAR® heart rate straps such as POLAR® OwnCode® chest straps will not work with this equipment.)

If you have a pacemaker or other implanted electronic device, consult your doctor before using a wireless chest strap or other telemetric heart rate monitor.

The heart rate displayed on the console is an approximation and should be used for reference only.

Chest Strap

Using the heart rate transmitter chest strap lets you monitor your heart rate at any time during your workout.

Consult a physician before you start an exercise program. Stop exercising if you feel pain or tightness in your chest, become short of breath, or feel faint. Contact your doctor before you use the machine again. Use the values calculated or measured by the machine's computer for reference purposes only.

To put on your chest strap:

1. Adjust the strap length to fit snugly and comfortably against your skin. Secure the strap around your chest, just below the chest muscles, and buckle it.
2. Lift the transmitter off your chest and moisten the two Grooved Electrode Areas on the back.
3. Check that the wet electrode areas are firmly against your skin.

The transmitter will send your heart rate to the machine's receiver and display your estimated Beats Per Minute (BPM).

Always remove the transmitter before you clean the chest strap. Clean the chest strap regularly with mild soap and water, and thoroughly dry it. Residual sweat and moisture may keep the transmitter active and drain the battery in the transmitter. Dry and wipe clean the transmitter after each use.

Note: Do not use abrasives or chemicals such as steel wool or alcohol when you clean the chest strap, as they can damage the electrodes permanently.

If the Console does not display a heart rate value, the transmitter may be at fault. Check that the textured contact areas on the chest strap are making contact with your skin. You may need to lightly wet the contact areas. If no signal appears or you need further assistance, call your Nautilus® Representative.

Heart Rate Calculations

Your maximum heart rate usually decreases from 220 Beats Per Minute (BPM) in childhood to approximately 160 BPM by age 60. This fall in heart rate is usually linear, decreasing by approximately one BPM for each year. There is no indication that training influences the decrease in maximum heart rate. Individuals of the same age could have different maximum heart rates. It is more accurate to find this value by completing a stress test than by using an age related formula.

Your at-rest heart rate is influenced by endurance training. The typical adult has an at-rest heart rate of approximately 72 BPM, whereas highly trained runners may have readings of 40 BPM or lower.

The Heart Rate table is an estimate of what Heart Rate Zone (HRZ) is effective to burn fat and improve your cardiovascular system. Physical conditions vary, therefore your individual HRZ could be several beats higher or lower than what is shown.

The most efficient procedure to burn fat during exercise is to start at a slow pace and gradually increase your intensity until your heart rate reaches between 60 – 85% of your maximum heart rate. Continue at that pace, keeping your heart rate in that target zone for over 20 minutes. The longer you maintain your target heart rate, the more fat your body will burn.

The graph is a brief guideline, describing the generally suggested target heart rates based on age. As noted above, your optimal target rate may be higher or lower. Consult your physician for your individual target heart rate zone.

Note: As with all exercises and fitness regimens, always use your best judgment when you increase your exercise time or intensity.

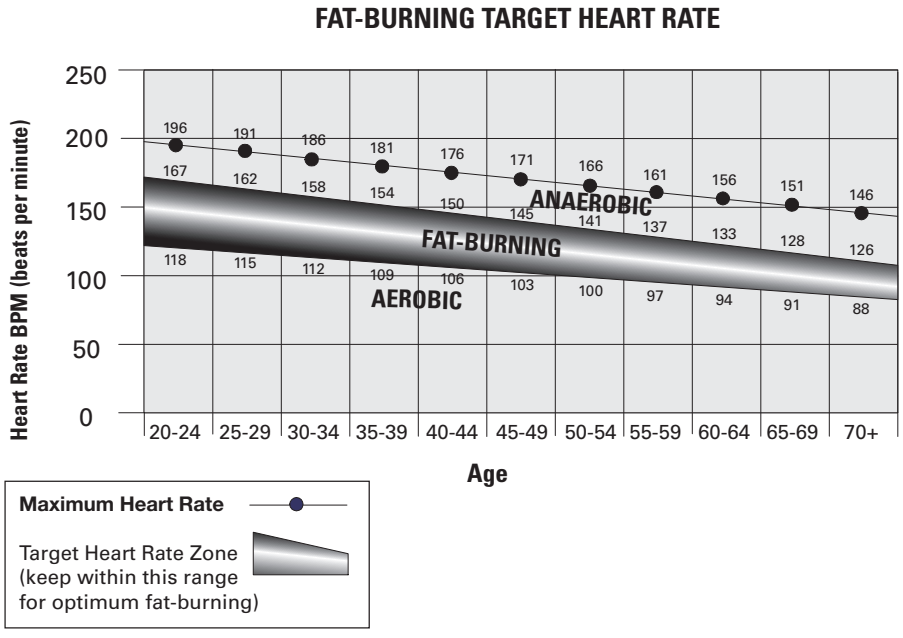

Fitness Basics

Frequency

To maintain good health, lose weight and improve your cardiovascular endurance, use the Bowflex® Max Trainer® cardio machine a minimum of 3 times per week, around 14 minutes each day.

If you are new to exercise (or returning to a regular exercise program), and you are unable to comfortably complete 14 minutes of continuous exercise at one time, just do 5 – 10 minutes, and gradually increase your workout time until you can reach a 14 minute total.

If your schedule is busy, and you are unable to fit 14 minutes of continuous exercise into your day, try accumulating 14 minutes by doing multiple shorter workouts on the same day. For example, 7 minutes in the morning and 7 minutes in the evening. This may be a great way to start your cardio training if you are new to vigorous activity.

For best results, combine your Bowflex® Max Trainer® cardio machine workouts with a strength training program using a Bowflex® home gym or Bowflex® SelectTech® dumbbells, and follow the Bowflex™ Body Weight Loss Guide included in this manual.

Consistency

Busy work schedules, family obligations and daily chores can make it difficult to fit regular exercise into your life. Try these tips to increase your chances of success:

Schedule your workouts the same way you schedule meetings or appointments. Select specific days and times each week, and don't change your workout times unless it is absolutely necessary.

Make a commitment to a family member, friend or spouse, and encourage each other to stay on track each week. Leave messages with friendly reminders to be consistent, and keep each other accountable.

Make your workouts more interesting by alternating between steady state (single-speed) workouts and interval training (varied speed) workouts. The Bowflex® Max Trainer® cardio machine is even more fun when you add this kind of variety.

Apparel

It is important to wear appropriate, safe and comfortable footwear and clothing when using the Bowflex® Max Trainer® cardio machine, including:

- Rubber-soled athletic walking or running shoes.
- Exercise clothing that allows you to move freely, and keep comfortably cool.
- Athletic support that provides stability and comfort.
- Exercise friendly water bottle for constant hydration.

Warm-Up *

Before you use your Bowflex® Max Trainer® cardio machine, consider doing these dynamic warm-up stretches, which will help prepare your body for the workout:

Dynamic Knee Hug

Stand with the feet together. Bring one knee forward and up toward the chest. Place the hands around the shin and pull the knee into the chest. Release the stretch by putting the foot on the floor. Each repetition of the sequence should take 1 to 3 seconds. Repeat as a continuous, controlled, fluid sequence 10 or 20 times. Repeat the stretch with the other leg.

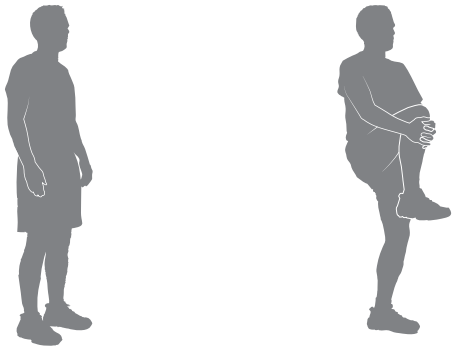

Dynamic Knee Bend

Stand with the feet together. Hold onto a wall for balance with one hand, if necessary. Raise the heel of one foot toward the gluteals. Release the stretch by putting the foot on the floor. Each repetition of the sequence should take 1 to 3 seconds. Repeat as a continuous, controlled, fluid sequence 10 or 20 times. Repeat the stretch with the other leg.

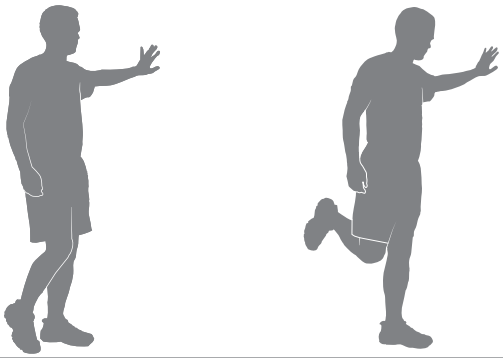

Dynamic Knee Kick

Stand tall and hold one leg up with the hands at hip height, keeping the knee bent. Hold onto a wall for balance with one hand, if necessary. Straighten the knee as far as comfortably possible. Release the stretch by bending the knee. Each repetition of the sequence should take 1 to 3 seconds. Repeat as a continuous, controlled, fluid sequence 10 or 20 times. Repeat the stretch with the other leg.

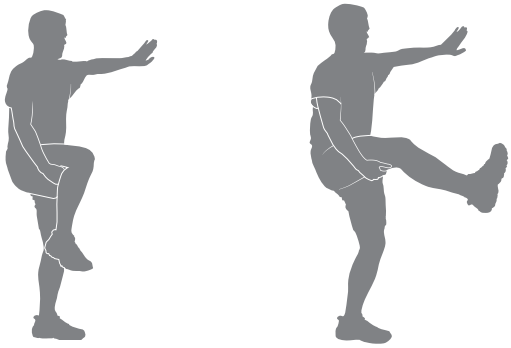

Dynamic Twist

Stand with the feet shoulder-width apart. Bend the elbows; hold the arms out to the sides. Twist the upper body to one side and then the other side as far as comfortably possible. Each repetition of the sequence should take 1 to 3 seconds. Repeat as a continuous, controlled, fluid sequence 10 or 20 times

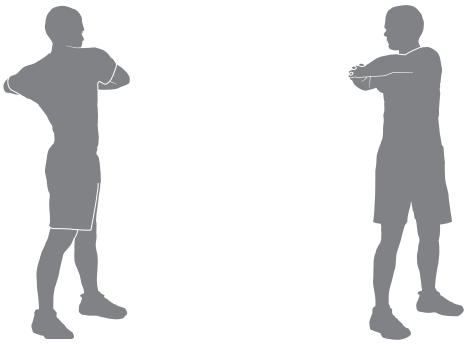

* Source: Jay Blahnik's Full-Body Flexibility, Second Edition, 2010. HumanKinetics.com.

Dynamic Bent Knee Heel Press
Stand with one foot forward and one foot back, hip-width apart and feet facing forward. Hold onto a wall for balance with one hand, if necessary. Bend both knees putting weight on the back heel. Release the stretch by returning to the start position. Each repetition of the sequence should take 1 to 3 seconds. Repeat as a continuous, controlled, fluid sequence 10 or 20 times. Repeat the stretch with the other leg. Touch a wall or hold onto something for balance, if necessary.

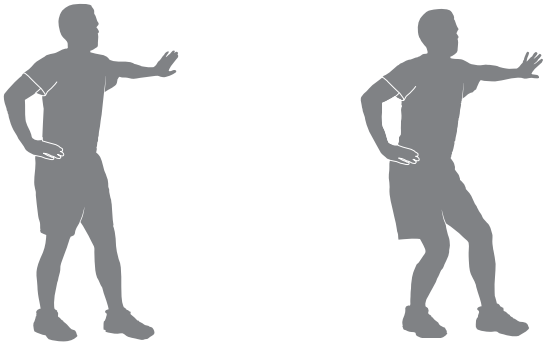

Dynamic Side Reach
Stand with the feet apart, the knees slightly bent and the arms at the sides of the body. Reach with one hand above the head and lean over to the opposite side. Release the stretch by returning to the start position. Then reach with the other hand to the opposite side. Use the other arm to support the body weight on the thigh, if necessary. Each repetition of the sequence should take 1 to 3 seconds. Repeat as a continuous, controlled, fluid sequence 10 or 20 times.

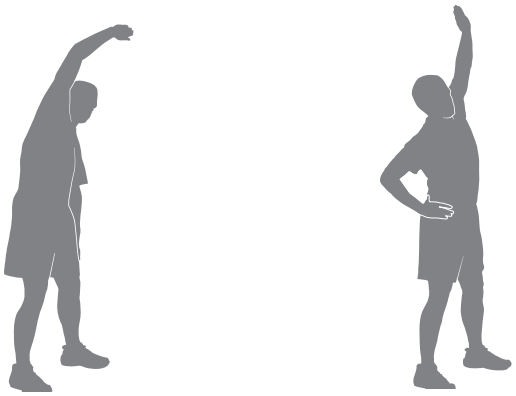

Workouts

Follow these guidelines to ease yourself into a weekly exercise regimen. Use your judgment and/or the advice of your physician or health care professional to find the intensity and level of your workouts.

Consult a physician before you start an exercise program. Stop exercising if you feel pain or tightness in your chest, become short of breath, or feel faint. Contact your doctor before you use the machine again. Use the values calculated or measured by the machine's computer for reference purposes only. The heart rate displayed on the console is an approximation and should be used for reference only.

Steady State and Interval Training are 2 types of workouts you can do on your Bowflex® Max Trainer® cardio machine:

Steady State workouts

A Steady State workout involves slowly increasing your workout speed to a challenging, but comfortable, speed you can hold for most of your workout. Getting your Heart Rate up into the Fat-Burning, Heart Zone zone for an entire workout would be a great Steady State workout. For example, holding a 6 calories per minute Burn Rate pace for the entire workout, except during the warm-up and cool-down. Steady State workouts help you build exercise confidence, stamina and endurance, and are essential to a well-rounded cardiovascular training program.

Interval Training workouts

An Interval Training workout involves adjusting your workout intensity for specific lengths of time to raise and lower your breathing rate, heart rate and calorie burn. This form of workout allows you to burn more calories than a standard workout in a shorter period of time. Using the Calorie Burn Rate display, you can adjust the intensity of your workout quickly to achieve your goals.

The Bowflex® Max Trainer® cardio machine combines 8 "ACTIVE" and 8 "REST" segments to create an Interval workout. During an "ACTIVE" segment, push yourself to a level of high calorie burn that can be repeated for the 8 segments. Then during the "REST" segments, allow yourself to decrease the intensity and prepare for the next "ACTIVE" segment. These changes in intensity, along with pushing your body, is where the maximum benefits are gained from Interval Training workouts.

Interval Training workouts provide variety, help minimize overuse injuries (that sometimes occur from doing only Steady State workouts), maximize calorie burn and improve fitness.

The Bowflex® Max Trainer® cardio machine is designed to cushion your joints and muscles, and both Steady State and Interval Training workouts should feel much more comfortable than walking or running outside on a hard surface or a treadmill.

After Burn Rate

At the end of an intense Interval Training workout, your body will actually need to expend additional energy to replenish your body's reserves. This additional amount of energy that your body will be using is the After Burn Rate, or EPOC (Excess Post-exercise Oxygen Consumption). The level of this additional energy requirement for your body is directly related to many factors. Some factors are your physical fitness level, intensity level of the interval training workout, length of oxygen deprivation during the workout, and physical demands during the recovery phase.

In summary, your body will be burning more calories for hours after your workout. So after an intense MAX Interval workout, you may feel the effects for hours afterwards.

Workout Log

Use this log to track your workouts and progress. Tracking your workouts helps you stay motivated and achieve your goals.

Date	Calories	Burn Rate (average)	Time	RPM (average)	Heart Rate (average)	Level (average)

Cool-Down *

When you are done using your cardio machine, consider doing these relaxing stretches, which will help your body recover from the workout and make you more flexible:

Lying Leg Raise

Lie on the floor face up with the legs slightly bent. Lift one leg up toward the ceiling, keeping the knee straight. Place the hands (or a strap) around the thigh and move the leg closer to the head. Hold the stretch for 10 to 30 seconds. Repeat the stretch on the other leg. Keep the head on the floor and do not round the spine.

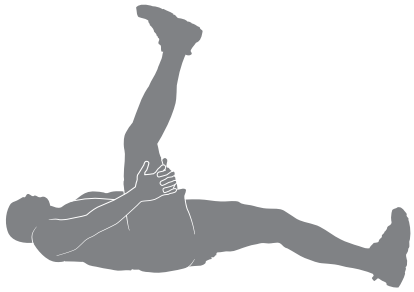

Side Lying Knee Bend
Lie on the floor on one side of the body and rest the head on the lower arm. Bend the top knee and hold the ankle with the same-side hand, then pull the heel toward the gluteals. Hold the stretch for 10 to 30 seconds. Lie on the other side and repeat the stretch with the other leg. Remember to hold the knees close together.

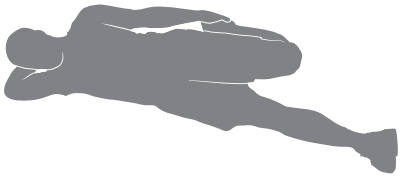

Lying Figure Four
Lie on the floor face up with the legs bent. Place one foot across the thigh of the opposite leg in the figure four position. Reach for the leg on the floor and pull it toward the chest. Hold the stretch for 10 to 30 seconds. Repeat the stretch with the other leg. Keep the head on the floor.

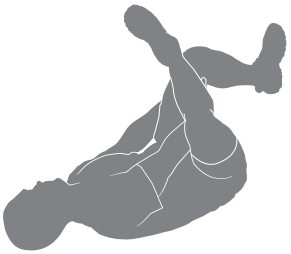

Seated Twist
Sit on the floor and extend the legs straight out in front of the body with the knees slightly bent. Place one hand on the floor behind the body and the other hand across the thigh. Twist the upper body as far as comfortably possible to one side. Hold the stretch for 10 to 30 seconds. Repeat the stretch on the other side.

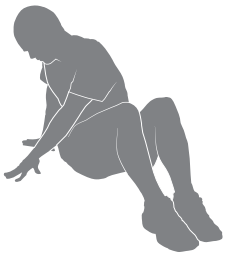

Seated Figure Four
Sit on the floor and extend one leg straight out in front of the body. Place the foot of the other leg across the thigh in the figure four position. Move the chest toward the legs, pivoting at the hip. Hold the stretch for 10 to 30 seconds. Repeat on the other leg. Use the arms to support the back.



Dynamic Heel Drop
Place the ball of one foot on the edge of a step or staircase. Place the other foot slightly in front. Hold onto a wall for balance with one hand, if necessary. Lower the heel of the back foot as far as comfortably possible, keeping the knee straight. Release the stretch by lifting the heel as high as comfortably possible. Each repetition of the sequence should take 1 to 3 seconds. Repeat as a continuous, controlled, fluid sequence 10 or 20 times. Repeat the stretch with the other leg

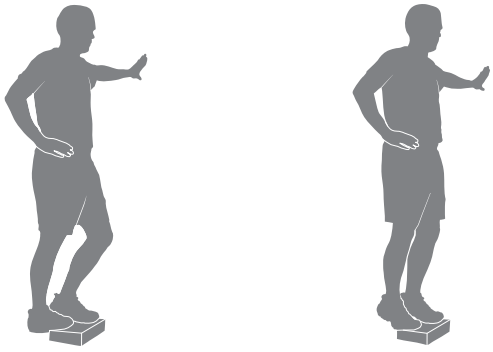

***** Source: Jay Blahnik's Full-Body Flexibility, Second Edition, 2010. HumanKinetics.com.

How Often Should You Exercise

Consult a physician before you start an exercise program. Stop exercising if you feel pain or tightness in your chest, become short of breath, or feel faint. Contact your doctor before you use the machine again. Use the values calculated or measured by the machine's computer for reference purposes only. The heart rate displayed on the console is an approximation and should be used for reference only.

- 3 times a week for about 14 minutes each day.
- Schedule workouts in advance and try to follow the schedule.

Note: If you are new to exercise (or returning to a regular exercise program), and you are unable to comfortably complete 14 minutes of continuous exercise at one time, just do 5 – 10 minutes, and gradually increase your workout time until you can reach a 14 minute total.

Intensity of Workout

To increase the intensity of your workout:

- Push yourself to increase the number of Pedal revolutions per minute
- Place your feet further out toward the rear of the Pedals
- Increase the Resistance Level and keep your RPM consistent, or increase it as well
- Use your upper and lower body at different levels
- Shift your grip location on the Upper Handlebars to work out other parts of your upper body

Hand Placement (Grip Selection)

The fitness machine is equipped with Upper Handlebars that allow for a variety of upper body workouts. When starting out, place your hands where it feels most comfortable and stable on the Upper Handlebars. As you progress on your fitness routine, shift your hand placement to target different muscle groups.

Exercise on this machine requires coordination and balance. Be sure to anticipate that changes in speed and resistance level can occur during workouts, and be attentive in order to avoid loss of balance and possible injury.

The Static Handlebars can also be used to add stability and allow you to focus the workout more on your legs.

Mounting and Dismounting Your Machine

Care should be used when mounting or dismounting the machine.

Be aware that the Pedals and the Handlebars are connected and when either of these parts move the other does as well. In order to avoid possible serious injury, grasp the Static Handlebars to steady yourself.

Be sure there is nothing under the Pedals or in the Air Resistance Fan before moving anything on the machine.

To mount your fitness machine:

1. Move the Pedals until the one nearest to you is in the lowest position.
2. Grasp the Static Handlebars under the Console Button Assembly.
3. Steadying yourself with the Static Handlebars, step up onto the lowest Pedal and place your other foot onto the opposite Pedal.

Note: "Bottomed out" is when the User is unable to start a workout because the Pedals will not move. If this occurs, safely grasp the Static Handlebars and apply your weight to the heel of the higher foot. While still grasping the Static Handlebar, lean back slightly applying more weight onto the heel. Once the Pedals begin to move, resume your intended workout.

To dismount your fitness machine:

1. Move the Pedal you want to dismount from to the highest position, and bring the machine to a complete stop.

This machine is not equipped with a free-wheel. Pedal speed should be reduced in a controlled manner.

2. Grasp the Static Handlebars under the Console to steady yourself.
3. With your weight on the lowest foot, swing the upper foot off the machine and down onto the floor.
4. Step off of the machine and release your grip from the Static Handlebars.

Getting Started

1. Place the fitness machine in your workout area.

Place the machine on a clean, hard, level surface, free from unwanted material or other objects that may hamper your ability to move freely. A rubber mat can be used below the machine to prevent the release of static electricity and protect your flooring.

The machine can be moved by one or more persons. Make sure that your own physical strength is capable of safely moving the machine.

2. Examine for any objects below the Pedals and in the Air Resistance Fan. Be sure it is clear.
3. Connect the power cord to the machine and into a grounded AC Wall Outlet.
4. If you use the Heart Rate Monitor, follow the Chest Strap directions.
5. To mount the machine, move the Pedals until the one nearest you is in the lowest position.

Care should be used when mounting or dismounting the machine.

Be aware that the Pedals and the Handlebars are connected and when either of these parts move the other does as well. In order to avoid possible serious injury, grasp the Static Handlebars to steady yourself.

6. Grasp the Static Handlebars under the Console Button Assembly.
7. Steadying yourself with the Static Handlebars, step up onto the lowest Pedal and place your other foot onto the opposite Pedal.

Note: "Bottomed out" is when the User is unable to start a workout because the Pedals will not move. If this occurs, safely grasp the Static Handlebars and apply your weight to the heel of the higher foot. While still grasping the Static Handlebar, lean back slightly applying more weight onto the heel. Once the Pedals begin to move, resume your intended workout.

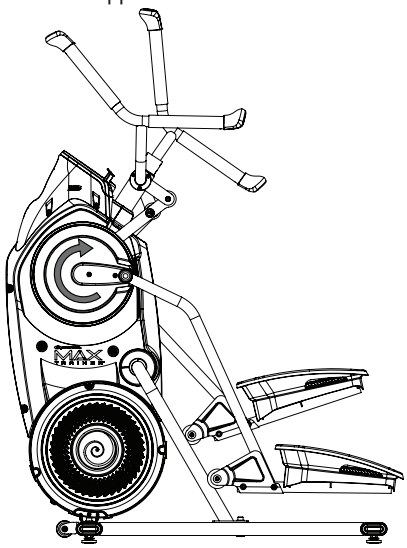

8. Push the USER button to select the desired User Profile.
9. Push the START button to begin a Quick Start workout. Starting with a Quick Start workout will get you familiar with how your Bowflex® Max Trainer® machine operates and responds to adjustments of Resistance Level and Burn Rate.

Note: When operating the Bowflex® Max Trainer® machine, be sure the Legs are moving in the direction as shown on the Crank Cover.

When ready for a Bowflex® Max Trainer® workout, be sure to program your User Profile (see the Edit a User Profile section) before starting the MAX workout. The suggested Target Burn Rates are based on your User Profile settings.

Power-Up / Idle Mode (WELCOME screen)

The Console will enter Power-Up / Idle Mode if it is plugged into a power source, any button is pushed, or if it receives a signal from the RPM sensor as a result of pedaling the machine.

Auto Shut-Off (Sleep Mode)

If the Console does not receive any input in approximately 5 minutes, it will automatically shut off. The LCD display is off while in Sleep Mode.

Note: The Console does not have an On/Off switch.

Manual (Quick Start) Program

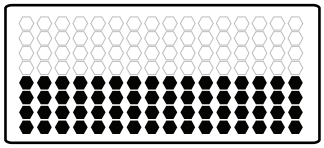

The Manual workout program is an open-ended workout that tracks your total time, allowing you total control. The Workout Profile Display shows the Target Burn Rate for the Manual program.

1. Stand on the machine.
2. Push the USER button to select your User Profile.
3. Push the START button to begin the Manual workout program.
4. When done with your workout, stop pedaling and push PAUSE/STOP to pause the workout. Push the PAUSE/STOP button again to end the workout.

MAX Interval Workout Program

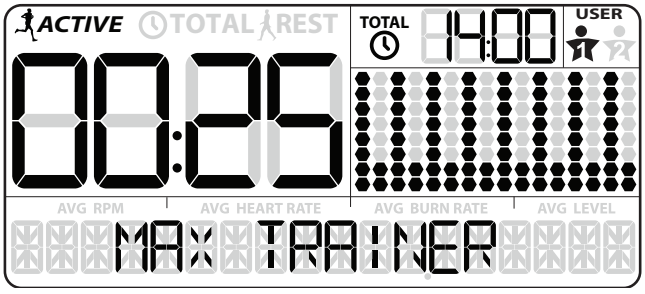

The MAX Interval Workout Program is a workout that alternates from intense bursts of output (“ACTIVE”), to a slower paced, ‘catch your breath’ time period (“REST”), both of which are repeated over eight cycles. The Workout Profile Display shows the Target Burn Rate for the MAX Interval program.

1. Stand on the machine.
2. Push the USER button to select your User Profile.

   Note: During the workout, the Console will show the Target LED Range based on the selected User Profile settings.
3. Push the MAX Interval button.

   Note: The Workout Profile Display will adjust the Burn Rate profile to the current User settings.
4. The workout will begin with an audible countdown as the Burn Rate display needle sweeps across the display and then settles on the current Burn Rate. The Target Burn Rate LED’s will also activate and sweep up to the recommended Burn Rate.

   The first workout segment is an “ACTIVE” interval that lasts for a shorter period of time. Safely push yourself to get the Burn Rate display into the Target Burn Rate (red LED’s) and keep it in the range until the time reaches 00:00.

   Note: The Target Burn Rate (LED) Range is provided only as a suggested target. The 5 LED range provides a lesser target, and allows a User to progress to the higher LED’s in the range as their fitness level increases. To change the Target Burn Rate (LED) Range, push the appropriate Burn Rate button until the Target Range is near the desired value.

   At the last 3 seconds of the “ACTIVE” workout, the Console will begin an audible countdown.
5. As the interval time reaches “00:00”, the Console will make the third audible confirmation and the next segment of the workout, a “REST” segment, will begin.

   The Target LED Range will shift from red to green and sweep to a reduced Burn Rate. During the REST Interval, continue to workout but at a lower level.

   At the last 3 seconds of the “REST” workout, the Console will begin an audible countdown. The interval is about to shift from a “REST” to an “ACTIVE” interval again.
6. As the interval time reaches “00:00”, the Console will make an audible confirmation and shift to the next “ACTIVE” segment.

   The shift from “ACTIVE” to “REST” segments will repeat for a total of 8 cycles over the workout.
7. When the last “REST” segment is completed, the Console will display ”WORKOUT COMPLETE”, and then show the workout results. The Console will display the total time of the “ACTIVE” intervals, along with TOTAL TIME. If there is no input for 5 minutes, the Console will automatically go into Sleep Mode.

   Note: If an Interval workout is ended before all 16 segments have been completed, the Console will only show the last segment completed on the Program Profile.

Paused / Results Mode

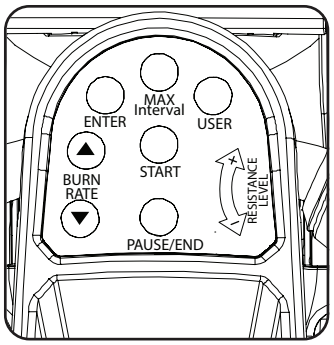

To Pause a workout:

1. Stop pedaling and push the PAUSE/STOP button to pause your workout.

   Note: The Console will automatically pause if there is no RPM signal for 5 seconds.

2. To continue your workout, push START or start pedaling.

When paused, the Console display will show “WORKOUT PAUSED”, and then flash the workout values.

If the workout does not resume or if the PAUSE/STOP button is pushed, the workout will display “WORKOUT COMPLETE”, and the result values are displayed (Total Calories, Total Time, Average RPM, Average Heart Rate, Average Burn Rate, and Average Level). If the workout was a MAX Interval workout, the Console will also display the total “ACTIVE” interval time.

If there is no RPM for 5 minutes, the Console automatically go to the Power-Up / Idle Mode.

Changing Resistance Levels

Use the Resistance Level Dial to adjust the resistance level. A Resistance level of “1” is the least resistance, a setting of “8” is the highest resistance level.

Edit a User Profile

For a more accurate calorie count and Target Calorie Burn, a User Profile should be customized to the User.

1. Push USER button to select your User Profile (User 1 or User 2).
2. Push and hold the USER button for 3 seconds to begin the Edit User mode.
3. The Console will display the AGE prompt with the default age value (“32”). Use the Burn Rate/Increase or Burn Rate/Decrease buttons to adjust the value, and push ENTER to set the value.
4. The Console will display the GENDER prompt with the default gender value (“FEMALE”). Use the Burn Rate/Increase or Burn Rate/Decrease buttons to adjust the value, and push ENTER to set the value.
5. The Console will display the UNITS prompt with the default units value (“LBS”). Use the Burn Rate/Increase or Burn Rate/Decrease buttons to adjust the value, and push ENTER to set the value.
6. The Console will display the WEIGHT prompt with the default weight value (“160”). Use the Burn Rate/Increase or Burn Rate/Decrease buttons to adjust the value, and push ENTER to set the value.
7. The Console will display the HEIGHT prompt with the default height value (“60 INCHES”). Use the Burn Rate/Increase or Burn Rate/Decrease buttons to adjust the value, and push ENTER to set the value.
8. The Console will display the RESET SETTINGS prompt with the default value (“NO”). Use the Burn Rate/Increase or Burn Rate/Decrease buttons to adjust the value, and push ENTER to accept the value. All Workout settings for the User will be reset to the default settings.
9. The User Profile review is complete, and the Console will display the WELCOME screen.

On the initial edit of each User Profile, all screens must be reviewed and accepted. After the initial edit, a User can adjust a value, set it, and push PAUSE/STOP to exit the Edit User mode.

Customize the MAX Interval Program

The interval times and burn rate levels can be adjusted on the MAX Interval Program. The adjusted values will be set as the default settings for future workouts.

1. Step up to the machine.
2. Push and hold down the MAX Interval button for 3 seconds.
3. The Console will display the “ACTIVE” interval time, flashing. The ACTIVE segments in the Profile display will also be flashing. Push the Burn Rate/Increase or Burn Rate/Decrease buttons to adjust the “ACTIVE” interval time.

   Note: Intervals are limited to a maximum of 10:00 for each type (“ACTIVE” or “REST”), and the entire workout is limited to a maximum of 99:04 minutes.
4. Push the ENTER button to set the displayed value.
5. The Console will display the “ACTIVE” Burn Rate adjusted to the User settings, flashing. Push the Burn Rate/Increase or Burn Rate/Decrease buttons to adjust the “ACTIVE” Burn Rate level.
6. Push the ENTER button to set the displayed value.
7. The “REST” interval time is now displayed, flashing, along with the other segments on the Profile display. Push the Burn Rate/Increase or Burn Rate/Decrease buttons to adjust the “REST” interval time.
8. Push the ENTER button to set the displayed value.
9. The Console will display the “REST” Burn Rate adjusted to the User settings, flashing. Push the Burn Rate/Increase or Burn Rate/Decrease buttons to adjust the “REST” Burn Rate level.
10. Push the ENTER button to set the displayed value.

Console Setup Mode

The Console Setup Mode lets you control the sound settings, or see maintenance statistics (Total Run Hours and Software Version).

1. Push and hold down the Burn Rate/Increase and PAUSE/END buttons for 3 seconds while in the Power-Up Mode to go into the Console Setup Mode.

   Note: Push PAUSE/END to exit the Console Setup Mode and return to the Power-Up Mode screen.

2. The Console display shows the Sound Settings prompt with the current setting. Push the Burn Rate/Increase or Burn Rate/Decrease buttons to change between the settings of “OFF” and “1” through “7”. A setting of 7 is the loudest sound level.
3. Push ENTER to set.
4. The Console display shows the TOTAL RUN HOURS for the machine.
5. For the next prompt, push the ENTER button.
6. The Console display shows the Software Version prompt.
7. Push the ENTER button to exit the Console Setup Mode.

   The Console will display the Power-Up Mode screen.

Read all maintenance instructions fully before you start any repair work. In some conditions, an assistant is required to do the necessary tasks.

Equipment must be regularly examined for damage and repairs. The owner is responsible to make sure that regular maintenance is done. Worn or damaged components must be repaired or replaced immediately. Only manufacturer supplied components can be used to maintain and repair the equipment.

⚠DANGER To reduce the risk of electrical shock or usage of the equipment, always unplug the power cord from the wall outlet and the machine and wait 5 minutes before cleaning, maintaining or repairing the machine. Place the power cord in a secure location.

Daily:	Before each use, examine the exercise machine for loose, broken, damaged, or worn parts. Do not use if found in this condition. Repair or replace all parts at the first sign of wear or damage. After each workout, use a damp cloth to wipe your machine and Console free of sweat. Note: Avoid excessive moisture on the Console.
Weekly:	Check for smooth roller operation. Wipe the machine to remove dust, dirt, or grime. Clean the rails and surface of the rollers with a damp cloth. **Note:** Do not use petroleum based products.
Monthly or after 20 hours:	Make sure all bolts and screws are tight. Tighten as necessary.

NOTICE: Do not clean with a petroleum based solvent or an automotive cleaner. Be sure to keep the Console free of moisture.

Maintenance Parts

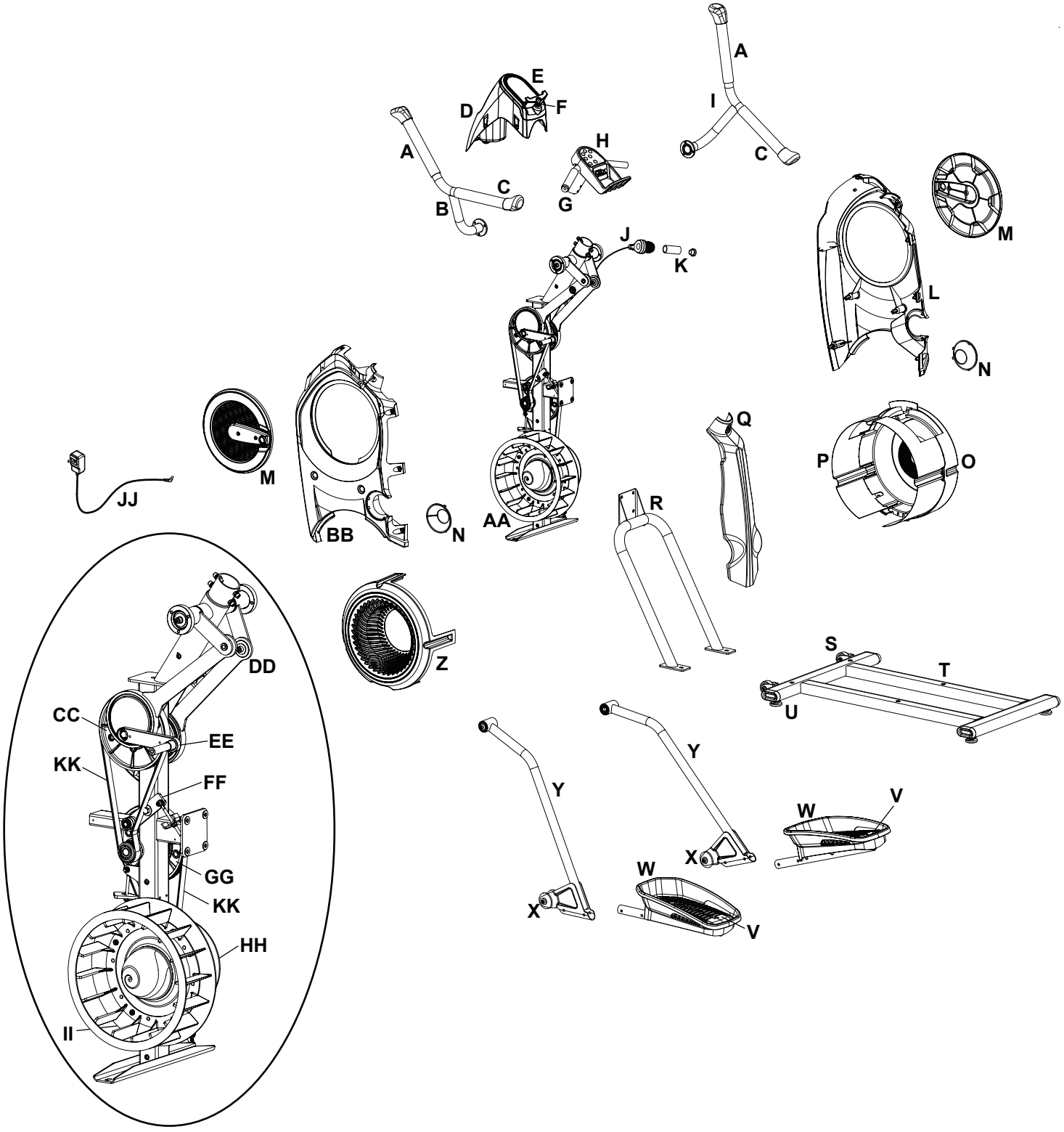

A	Upper Handle Grip	O	Shroud, Right Fan	CC	Drive Pulley, Upper
B	Handlebar, Left	P	Fan Assembly Inserts	DD	Arm Drive Assembly
C	Lower Handle Grip	Q	Shroud, Rear	EE	Crank Arm
D	Console Shroud / Water Bottle Holder	R	Rail Assembly	FF	Tensioner
E	Console Assembly	S	Transport Wheel	GG	Drive Pulley, Lower
F	Speaker	T	Stabilizer	HH	Fan Back Plate
G	Handlebar, Static	U	Leveler	II	Speed Sensor (behind Fan)
H	Console Button Assembly	V	Foot Pad Insert	JJ	Power Cord
I	Handlebar, Right	W	Foot Pad	KK	Drive Belt
J	Shifter Assembly	X	Roller		
K	Handlebar Grip, Static	Y	Leg		
L	Shroud, Right	Z	Shroud, Left Fan		
M	Crank Cover	AA	Fan Assembly		
N	Cap	BB	Shroud, Left		

Troubleshooting

Condition/Problem	Things to Check	Solution
No display/partial display/unit will not turn on	Check electrical (wall) outlet	Make sure unit is plugged into a functioning wall outlet.
	Pedal movement	Safely pedal the machine for a few seconds. The Console should sense the signal from the Speed Sensor and fully activate.
	Check connection at front of unit	Connection should be secure and undamaged. Replace adapter or connection at unit if either are damaged.
	Check data cable connections/orientation	Be sure cable is connected securely and oriented properly. Small latch on connector should line up and snap into place.
	Check data cable integrity	All wires in cable should be intact. If any are visibly crimped or cut, replace cable.
	Check console display for damage	Check for visual sign that console display is cracked or otherwise damaged. Replace Console if damaged.
	AC Adapter	Check for visual sign that AC Adapter is cracked or otherwise damaged. Replace AC Adapter if damaged.
	Console Display	If Console only has partial display and all connections are fine, replace the Console.
		If the above steps do not resolve the problem, contact Customer Care for further assistance.
No response on Console when button is pushed	Console Button Assembly	Try other buttons to get any response on the Console.
	Check data cable integrity from Console Button Assembly to Console	All wires in cable should be intact. If any are visibly crimped or cut, replace cable.
	Check data cable connections/orientation	Be sure cable is connected securely and oriented properly. Small latch on connector should line up and snap into place.
	Check console display for damage	Check for visual sign that console display is cracked or otherwise damaged. Replace Console if damaged.
	Check Console Button Assembly	Check for visual sign that the Console Button Assembly is otherwise damaged. Replace the Console Button Assembly if damaged.
		If the above steps do not resolve the problem, contact Customer Care for further assistance.
No speed/RPM reading	Check data cable integrity	All wires in cable should be intact. If any are cut or crimped, replace cable.
	Check data cable connections/orientation	Be sure cable is connected securely and oriented properly. Small latch on connector should line up and snap into place.
	Check magnet position (requires shroud removal)	Magnet should be in place on pulley.
	Check Speed Sensor (requires shroud removal)	Speed sensor should be aligned with magnet and connected to data cable. Realign sensor if necessary. Replace if there is any damage to the sensor or the connecting wire.
	Console Electronics	If tests reveal no other issues, contact Customer Care.
Unit operates but Telemetric HR not displayed	Chest Strap	Strap should be "POLAR®" compatible and uncoded. Make sure strap is directly against skin and contact area is wet.
	Interference	Try moving unit away from sources of interference (TV, Microwave, etc).
	Replace Chest Strap	If interference is eliminated and HR does not function, replace strap.

Condition/Problem	Things to Check	Solution
Console shuts off (enters sleep mode) while in use	Check electrical (wall) outlet	Make sure unit is plugged into a functioning wall outlet.
	Check connection at front of unit	Connection should be secure and undamaged. Replace adapter or connection at unit if either are damaged.
	Check data cable integrity	All wires in the cable should be intact. If any are cut or crimped, replace cable.
	Check data cable connections/orientation	Be sure cable is connected securely and oriented properly. Small latch on connector should line up and snap into place.
	Reset machine	Unplug unit from electrical outlet for 5 minutes. Reconnect to outlet.
	Check magnet position (requires shroud removal)	Magnet should be in place on pulley.
	Check Speed Sensor (requires shroud removal)	Speed sensor should be aligned with magnet and connected to data cable. Realign sensor if necessary. Replace if there is any damage to the sensor or the connecting wire.
Pedals will not move	Pedal locations	The Pedals may be “bottomed out”. Safely grasp the Static Handlebars and apply your weight to the heel of the higher foot. While still grasping the Static Handlebar, lean back slightly applying more weight onto the heel. Once the Pedals begin to move, resume your intended workout.
Fan will not turn	Check for blockage of fan	Unplug unit from electrical outlet for 5 minutes. Remove material from fan. If necessary, detach the Shrouds to help with removal. Do not operate machine until Shrouds have been replaced.
Unit rocks/does not sit level	Check leveler adjustment	Adjust levelers until machine is level.
	Check surface under unit	Adjustment may not be able to compensate for extremely uneven surfaces. Move machine to level area.
Foot pedals loose/unit difficult to operate	Hardware	Tightly secure all hardware on the Pedal Arms and Handlebar Arms.

Bowflex™ Body Weight Loss Guide

Introduction and Overview

Welcome to the Bowflex™ Body Weight Loss Guide. This guide is designed to be used with your Bowflex® equipment and will help you:

- Lose weight and get lean
- Improve your health and wellness
- Increase your energy and vitality

Consult a physician before you start an exercise program or a new health and diet plan. Stop exercising if you feel pain or tightness in your chest, become short of breath, or feel faint. Contact your doctor before you use the machine again. Use the values calculated or measured by the machine's computer for reference purposes only. The heart rate displayed on the console is an approximation and should be used for reference only.

By focusing on the main three elements of the Bowflex™ Body Weight Loss Guide- quality, balance, and consistency- you'll be able to reach and maintain your weight loss and fitness goals for the next six weeks and beyond.

- **Quality** – The emphasis of this plan is on eating more whole foods and getting the most nutrients from your calories as possible. Making the majority of your diet from foods that have a single ingredient (for example fruits, vegetables, fish, lean protein, eggs, beans, nuts, and whole grains) provides the vitamins, minerals, fiber, protein, and healthy fats your body needs.
- **Balance** – Each of the meals and snacks in this guide have a source of fiber or smart carbohydrate, protein, and healthy fat to keep your energy levels consistent throughout the day to fuel your workouts. By having this balance you'll feel fuller longer, which is critical to weight loss success.
- **Consistency** – Getting about the same number of calories each day is important for your metabolism and your mindset. If you overdo it one day, don't try to make up for it the next day by not eating or cutting your calories drastically. Get right back on track by following this guide!

Results & Expectations

Results will vary depending on your age, starting weight, and exercise level. By adhering to a diet and exercise routine, you may lose 1-3 lbs per week and experience increased energy levels.

5 Tips for Long-Term Success

1. **Keep a food log** including hunger levels and water intake. Free online food logs and mobile apps are available at www.myfitnesspal.com and www.loseit.com
2. **Weigh and/or take measurements weekly** – no more and no less. Weighing weekly rather than daily or every other day is best. You'll track your progress and keep yourself in check without getting discouraged if the scale doesn't move for a few days. And remember, weight is just a number and it's influenced by muscle gain as well as fat loss. Feeling how your clothes fit can often be a better indicator of progress as your body adapts to exercise and nutrition changes.
3. **Measure portions** – To avoid portion creep, use measuring cups and spoons for grains (rice, pasta, cereal), beans, nuts, oils, and dairy. Use the Portion Sizes Guide for other foods.
4. **Plan ahead** – Make a meal plan for the week or log your food a day in advance. Planning sets you up for success, especially for social events and eating out.
5. **Practice your desired long-term habits** – It's easy to justify poor eating choices when you're only focused on the short term. Focus on the long term satisfaction of a slimmer, healthier you rather than the temporary gratification you'll get from splurging.

How to Use this Guide

- **Eat breakfast within 90 minutes of waking up and balance your meals and snacks throughout the day**
  - Don't go longer than 5-6 hours without eating
  - If you're not used to eating breakfast, start out small with a piece of fruit and have something else 1-2 hours later. Your body adapts to not eating breakfast, but as soon as you start eating early in the day and cutting back on dinner portions you'll notice your hunger will increase. This is a good sign your metabolism is working!
- **Mix and match meal options**
  - Select 1 option from the appropriate meal plan (male or female) for breakfast, lunch, and dinner, paying close attention to portion sizes
  - Select 1-2 snack options per day
  - You have the option to substitute one snack for one treat under 150 calories
  - Use the meal plan, sample options, and grocery list to create your own meals for more variety

– You can swap out any type of protein, vegetables or smart carbs for the suggested meal options. For example:
    - Turkey for tuna
    - Any fish or seafood for chicken
    - Cooked vegetables instead of salad
- **Eat your calories**
  – Cut out high calorie beverages like soda, juices, coffee drinks, and alcohol
  – Stick with water, unsweetened tea, and coffee. Aim for a minimum of 64oz (1.9 liters) of water per day to stay well hydrated
- **If you're still hungry after or in between meals:**
  – Have a glass of water and wait 15-20 minutes. Many times we mistake thirst (or even boredom!) for hunger. Wait out the initial urge to eat and sometimes it will pass.
  – If you're still hungry after waiting 15-20 minutes have a snack or mini-meal with fruit, vegetables, and protein.

If your goal is muscle gain or strength:

- Use the same meal plan but increase portion sizes in the same ratios to increase the total number of calories you eat every day. For example, increase portion sizes of protein and smart carbs at meals by 50%. Adding a snack is another option to meet your body's increased calorie needs in order to gain muscle and strength.
- Focus on post-workout nutrition by having one of your snacks within 30 minutes after you complete your workout. Make sure to have a combination of carbohydrates such as fruit with protein (yogurt, milk, or protein powder) to promote muscle growth and recovery. Chocolate milk is also a great option.

Meal Plan Overview

The female meal plan provides about 1400 calories, and the male plan provides about 1600 calories, of high quality nutrition to not only help you lose weight and feel great but get the most out of your calories. The vitamins, minerals, and antioxidants from eating mostly whole foods help support optimal health. These calorie levels will result in healthy weight loss for the majority of people. Keep in mind that everyone's metabolism is very different depending on age, height, weight, activity level, and genetics. Pay close attention to your weight, hunger levels, and energy and adjust your calories if needed.

Follow these guidelines if you're over 55:

- If you're over 55, you need fewer calories because your metabolism slows as you age. Stick with three meals with one optional snack per day.

Follow these guidelines if you're under 25:

- If you're under 25 you may need more calories. Add another snack if you feel low on energy or are extremely hungry.

Breakfast

Breakfast includes a smart carb, fruit, and a source of protein, which will also have fat. With a balance of carbohydrates and fiber from the smart carb and fruit combined with protein and fat, you'll energize your day and help control hunger levels throughout the day.

Snacks

Each snack is a balance of carbohydrates and protein to keep your blood sugar more consistent, which means you won't experience hunger and energy level spikes and drops.

This happens when you have a high carb-only snack like chips, candy, soda, crackers, or pretzels.

Lunch and Dinner

Lunch combines filling fiber from vegetables and smart carbs with a lean, or low-fat, protein. The healthy fat can come either from the protein added during cooking (nuts on a salad) or as a dressing or sauce (such as oil and vinegar salad dressing).

Here's an overview of what an ideal day looks like:
(See Portion Size Guide for proper serving sizes)

Breakfast

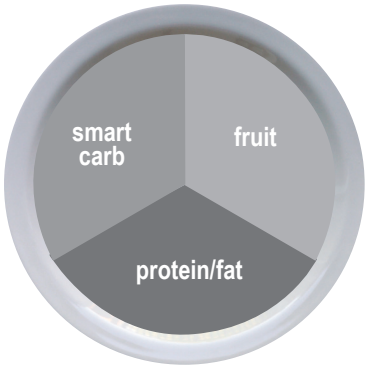

Snack #1

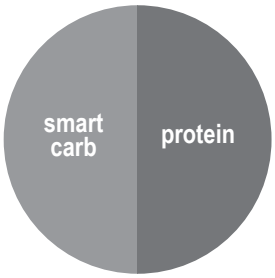

Lunch

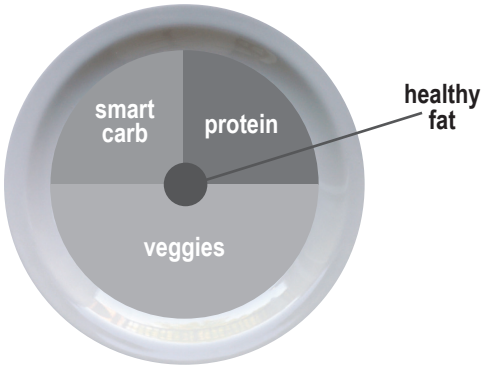

Snack #2

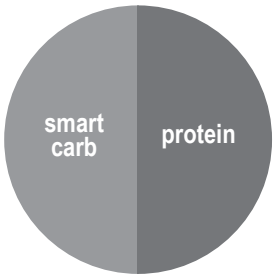

Dinner

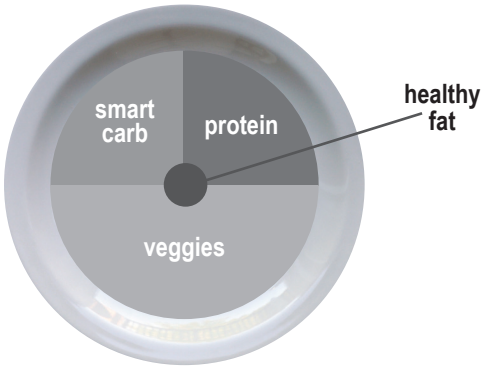

Breakfast Options	Fruit	Smart Carb	Protein/Fat
Fruit and Nut Oatmeal Cook plain oats in water. Top with fruit, nuts, milk, cinnamon, and honey.	Berries or banana	Plain oats (Regular or quick-cook)	Nuts and milk
Egg Muffin Cook egg/s. Toast bread and top with 1 slice of cheese, 1 slice of ham, and tomato.	Tomato	English muffin or sandwich thin	Egg, ham, and cheese
Yogurt Power Parfait Top yogurt with fruit. Sprinkle with 1 serving of nuts, 2-3 tbsp wheat germ, or ground flaxseed, 1 tbsp oats, and cinnamon.	Chopped fruit of your choice	Oats, wheat germ, and ground flaxseed	Plain non-fat Greek yogurt and nuts
On the Go PB & Apple Sandwich Toast bread. Spread on peanut butter, thin slices of ½ an apple, and 1 teaspoon of honey.	Sliced apple	Sandwich thin, bread, or bagel thin	Peanut butter

Lunch & Dinner Options	Lean Protein	Smart Carb	Veggies
Pork Loin, Sweet Potato & Green Beans	Grilled or baked pork loin	Baked Sweet Potato	Green Beans
Chicken Stir Fry Flavor with 2 tablespoon teriyaki sauce	Chicken breast or boneless skinless thigh	Brown or wild rice	Mixed stir fry vegetables (fresh or frozen)
Steak Tacos with Side Salad (3 for males, 2 for females) Top with salsa, cilantro, and sprinkle of shredded cheese	Flank or sirloin steak	Corn tortillas	Salad
Whole Wheat Pasta with Shrimp or Cannellini Beans & Marinara Sauce	Shrimp (frozen or fresh) or cannellini beans	Whole wheat pasta	Steamed broccoli
Bunless Burgers with Oven Fries, Corn, & Salad Grill burgers. Bake sliced potatoes on sprayed cookie sheet for 25-30 minutes @ 425°F.	93% lean ground beef or turkey	Oven baked fries	Corn on the cob + side salad
Tuna & Avocado Wrap with Vegetable Soup Use 3oz of tuna (1 can). Top with lettuce, tomato, avocado, and mustard.	Tuna	High-fiber wrap	Vegetable soup (homemade or low-sodium canned)

Snack Options	
Smart Carb	**Protein**
1 medium apple	10-15 almonds
Baby carrots	2 tbsp hummus
1 serving of crackers*	1 string cheese
Energy or protein bar with <200 calories*	

*See www.Bowflex.com/Resources for brand recommendations

Optional Treats

You have the choice of replacing Snack #2 with a 100-150 calorie treat. You can have an optional treat every day but for optimal health it is recommended to limit small splurges to 3-4 times per week. Use the approach that works best for you. Here are a few examples:

- ½ cup lowfat ice cream
- 1 small bag of baked potato chips
- 4oz of wine or 12oz light beer
- 3 cups of air-popped or light popcorn

Sample 3 Day Plan

Based on each of the meal options listed above, a typical 3 day plan could look like this:

	Day 1	**Day 2**	**Day 3**
Breakfast	Egg muffin	Power yogurt parfait	Fruit + nut oatmeal
Snack 1	Apple with almonds	Nut Thins® + string cheese	Baby carrots and hummus
Lunch	Tuna & avocado wrap with soup	Leftovers from dinner- day 1	Leftovers from dinner- day 2
Optional Snack 2 or Treat	½ cup ice cream bar	Energy bar	100 calorie bag of light popcorn
Dinner	Shrimp pasta	Chicken stir fry	Bunless burgers

Portion Size Guide

Each of the items listed are for one serving

MALE	FEMALE
PROTEIN	
2 eggs 5oz chicken, fish, lean meat, or tofu 2/3 cup beans or lentils* 1 cup greek yogurt* 1.5oz cheese*	1 egg 3oz chicken, fish, or lean meat 1/2 cup beans or lentils* 1/2 cup greek yogurt* 1.5oz cheese*
HEALTHY FAT	
2 Tblspn peanut or nut butter* 2 tspn olive, flax, or walnut oil 1/4 cup of nuts 1/3 medium avocado	1 tblspn peanut or nut butter* 1 tspn olive, flax or walnut oil 1/8 cup or 2 tablespoons of nuts (approx.15 almonds) 1/4 medium avocado
SMART CARB	
1 cup cooked grains (1/2 cup raw): oats, brown rice, quinoa, pasta 1 medium sweet or regular potato 2 corn tortillas 1 slice of bread (or 2 light slices equaling 120 calories or less) 1 english muffin, sandwich thin, or high-fiber wrap	1/2 cup cooked (1/4 cup raw) grains 1/2 medium sweet potato or regular potato 2 corn tortillas 1 slice of bread (or 2 light slices equaling 120 calories or less) 1 english muffin, sandwich thin, or high-fiber wrap
FRUIT	
1 medium apple, orange, or pear 1 small banana (length of your hand) 1 cup berries or chopped fruit 1/4 cup dried fruit (fresh or frozen is optimal)	
Vegetables* You can have unlimited vegetables except for peas and corn; stick with 1/2 cup serving	
2 cups spinach or lettuce = 2 cupped hands 1 cup raw vegetables 1/2 cup cooked vegetables 6oz low sodium vegetable juice	
OPTIONAL TREATS	
1/2 cup lowfat ice cream 1 small bag of baked potato chips 1oz dark chocolate 4oz of wine or 12oz light beer 3 cups air-popped or light popcorn	

* some foods are a combination of protein and carbs or protein and fat



1 cup = baseball



1/2 cup = lightbulb



1 oz or 2 tbsp = golf ball



1/4 cup nuts = Altoids tin



3 oz chicken or meat = deck of cards



1 medium potato = computer mouse



1 medium piece of fruit = tennis ball



1 -1/2 oz cheese = 3 dice

Grocery List

BREAD & GRAINS	
100% whole wheat bread Sprouted grain breads Light or whole wheat english muffins Sandwich or bagel thins Corn or low-carb whole wheat tortillas High-fiber wraps Plain oats: 1 minute or old fashioned Whole grains: brown rice, bulgar, barley, quinoa, couscous	Tips: Look for 100% whole wheat as the first ingredient. Look for 4g of fiber per slice or 5g per 2 slices of light or diet bread. Aim for bread with less than 100 calories per slice.

DAIRY & DAIRY ALTERNATIVES
Plain non-fat greek yogurt Kefir (yogurt like drink) Organic low-fat milk Enriched almond or soy milk Cheese: feta, parmesan, mozzarella, light havarti, provolone, swiss, string cheese, or single serving packages
MEAT, FISH, POULTRY & PROTEIN
Wild game Salmon, halibut, tuna, tilapia, shrimp, catfish, scallops, or crab Pork loin, pork chops, or pork roast Chicken or turkey breast or thighs (no skin) Eggs and 100% egg whites Lean beef: sirloin, chuck, round, tenderloin, 93% lean (organic and grass fed is best) Canned salmon or tuna (in water) Nitrate-free, reduced sodium ham, turkey, chicken, or roast beef lunch-meat Any type of bean, dry or canned low-sodium varieties Tofu and tempeh
Tips: Look for “Choice” or “Select” cuts of meat rather than “Prime”. Prime cuts are fattier. Limit intake of highly processed meat and imitation meat products like sausage, bacon, pepperoni, and hot dogs to once a week or less.
FROZEN FOODS
All vegetables without sauce All fruit Grains and grain medleys

CRACKERS, SNACKS & ENERGY BARS	
Any unsalted nuts or seeds Air-popped or light popcorn Edamame in the pod	Energy bars Crackers Hummus
Tips: Limit crackers, pretzels, and chips to 2-3 servings per week. Always pair with protein such as hummus, cheese, or nuts. Look for energy bars with less than 200 calories and 20g of sugar and at least 3g of protein and 3g of fiber. Look for crackers with less than 130 calories and 4g or less of fat per serving.	
FATS & OILS	
Avocado Olive, grapeseed, walnut, sesame, or flaxseed oil Butter/spreads: look for products free of trans fats and partially hydrogenated oils on the ingredient list.	
Tips: Light olive oil refers to the flavor, not the calorie content. Always measure oil and butter. Even if a fat is considered healthy, it’s still very high in calories and portions need to be controlled.	
DRESSINGS, CONDIMENTS & SAUCES	
Vinegars: rice, wine, balsamic All fresh or dried herbs and spices Mustard Salsa and chili sauce Marinara sauce with no high-fructose corn syrup Lemon and lime juice Bottled minced garlic and ginger Low-sodium soy sauce	
Tips: Look for products free of MSG, added colors, and high fructose corn syrup. Look for sauces under 50 calories per serving. Avoid cream based sauces and dressings like ranch, bleu cheese, and alfredo.	

All fruits and vegetables, fresh and frozen, are great choices. Since every meal has one or both, your shopping cart should reflect this.

Keep It Going

Tips for continued weight loss and maintaining changes

- **Keep weighing yourself weekly**, even after you've reached your goal weight
- **Continue keeping a food log.** If you have your meal plan well-established, log your food every other week to keep yourself on track. Don't feel like you have to do it every day.
- **Prepare for plateaus.** The scale might not budge for a few weeks or even months after some initial weight loss. This is normal and to be expected. It's the body's natural process for adjusting to your new lower weight. Stay focused on your long-term goal, celebrate your successes and changes, and mix up your workouts to help overcome the plateau.
- **Calorie adjustments for maintaining weight loss.** Once you've reached your goal weight, you can increase your calories 100-200 per day as long as your activity level stays the same
- **Treat yourself.** Have a non-food reward for each goal you hit such as a massage, a new outfit, or an outing with friends and family
- **Use the resources below** to find new recipes, get expert advice, and support to stay motivated

Resources

Downloadable Resources from Bowflex™ Website (www.Bowflex.com/Resources)

- Grocery Shopping List for Fridge (Blank Form)
- 7 Day Meal Planning Form
- Additional Dinner Options
- Pre and Post Workout Fueling Guide

Questions & Support

- Ask questions, post suggestions, and connect with our online Bowflex™ Dietitian on the Bowflex Facebook page

Recipes

- www.wholeliving.com
- www.eatingwell.com
- www.whfoods.org
- www.livebetteramerica.org

Online food logs

- www.myfitnesspal.com
- www.loseit.com

Who Is Covered
This warranty is valid only to the original purchaser and is not transferable or applicable to any other person(s).

What Is Covered
Nautilus, Inc. warrants that this product is free from defects in materials and workmanship, when used for the purpose intended, under normal conditions, and provided it receives proper care and maintenance as described in the Product's Assembly and Owner's manual. This warranty is good only for authentic, original, legitimate machines manufactured by Nautilus, Inc. and sold through an authorized agent and used in the United States or Canada.

Terms
- Frame 1 year
- Mechanical parts 1 year
- Electronics 1 year
- All other components 1 year
- Labor 90 days
  (Labor support does not include the installation of replacement parts involved in the initial product assembly and preventative maintenance services. All repairs covered under the labor portion of the warranty must be preauthorized by Nautilus.)

How Nautilus Will Support the Warranty
Throughout the terms of the warranty coverage, Nautilus, Inc. will repair any machine that proves to be defective in materials or workmanship. Nautilus reserves the right to replace the product in the event a repair is not possible. When Nautilus determines replacement is the correct remedy, Nautilus may apply a limited credit reimbursement toward another Nautilus, Inc. brand Product, at our discretion. This reimbursement may be prorated based on length of ownership. Nautilus, Inc. provides repair service within major metropolitan areas. Nautilus, Inc. reserves the right to charge the consumer for travel outside these areas. Nautilus, Inc. is not responsible for dealer labor or maintenance charges beyond the applicable warranty period(s) stated herein. Nautilus, Inc. reserves the right to substitute material, parts or products of equal or better quality if identical materials or products are not available at the time of service under this warranty. Any replacement of the product under the terms of the Warranty in no way extends the original Warranty period. Any limited credit reimbursement may be prorated based on length of ownership. THESE REMEDIES ARE THE EXCLUSIVE AND SOLE REMEDIES FOR ANY BREACH OF WARRANTY.

What You Must Do
- Retain appropriate and acceptable Proof of Purchase.
- Operate, maintain, and inspect the Product as specified in the Product Documentation (Assembly, Owner's Manuals, etc.).
- Product must be used exclusively for the purpose intended.
- Notify Nautilus within 30 days after detecting an issue with the Product.
- Install replacement parts or components in accordance with any Nautilus instructions.
- Perform diagnostic procedures with a trained Nautilus, Inc representative if requested.

What Is Not Covered
- Damage due to abuse, tampering or modification of the Product, failure to properly follow assembly instructions, maintenance instructions, or safety warnings as stated in the Product Documentation (Assembly, Owner's Manuals, etc), damage due to improper storage or the effect of environmental conditions such as moisture or weather, misuse, mishandling, accident, natural disasters, power surges.
- A machine placed or used in a commercial or institutional setting. This includes gyms, corporations, work places, clubs, fitness centers and any public or private entity that has a machine for use by its members, customers, employees or affiliates.
- Damage caused by exceeding maximum user weights as defined in the Product's Owner's manual or warning label.
- Damage due to normal usage and wear and tear.
- This warranty does not extend to any territories or countries outside the United States and Canada.

How to Obtain Service
For Products purchased directly from Nautilus, Inc. contact the Nautilus office listed on the Contacts page of the products Owner's manual. You may be required to return the defective component to a specified address for repair or inspection, at your expense. Standard ground shipping of any warranty replacement parts will be paid by Nautilus, Inc. For products purchased from a retailer, you may be asked to contact your retailer for warranty support.

Exclusions
The preceding warranties are the sole and exclusive express warranties made by Nautilus, Inc. They supersede any prior, contrary or additional representations, whether oral or written. No agent, representative, dealer, person or employee has the authority to alter or increase the obligations or limitations of this warranty. Any implied warranties, including the WARRANTY OF MERCHANTABILITY and any WARRANTY OF FITNESS FOR A PARTICULAR PURPOSE, are limited in duration to the term of the applicable express warranty provided above, whichever is longer. Some states do not allow limitations on how long an implied warranty lasts, so the above limitation may not apply to you.

Limitation of Remedies
EXCEPT AS OTHERWISE REQUIRED BY APPLICABLE LAW, THE PURCHASER'S EXCLUSIVE REMEDY IS LIMITED TO REPAIR OR REPLACEMENT OF ANY COMPONENT DEEMED BY NAUTILUS, INC. TO BE DEFECTIVE UNDER THE TERMS AND CONDITIONS STATED HEREIN. IN NO EVENT WILL NAUTILUS, INC. BE LIABLE FOR ANY SPECIAL, CONSEQUENTIAL, INCIDENTAL, INDIRECT OR ECONOMIC DAMAGES, REGARDLESS OF THE THEORY OF LIABILITY (INCLUDING, WITHOUT LIMITATION, PRODUCT LIABILITY, NEGLIGENCE OR OTHER TORT) OR FOR ANY LOST REVENUE, PROFIT, DATA, PRIVACY OR FOR ANY PUNITIVE DAMAGES ARISING OUT OF OR RELATED TO THE USE OF THE FITNESS MACHINE EVEN IF NAUTILUS, INC. HAS BEEN ADVISED OF THE POSSIBILITY OF SUCH DAMAGES. THIS EXCLUSION AND LIMITATION SHALL APPLY EVEN IF ANY REMEDY FAILS OF ITS ESSENTIAL PURPOSE. SOME STATES DO NOT ALLOW THE EXCLUSION OR LIMITATION OF CONSEQUENTIAL OR INCIDENTAL TYPE DAMAGES SO THE ABOVE LIMITATION MAY NOT APPLY TO YOU.

State Laws
This warranty gives you specific legal rights. You may also have other rights, which vary from state to state.

Expirations
If the warranty has expired, Nautilus, Inc. may assist with replacements or repairs to parts and labor, but there will be a charge for these services. Contact a Nautilus office for information on post-warranty parts and services. Nautilus does not guarantee availability of spare parts after expiration of warranty period.

International Purchases
If you purchased your machine outside of the United States consult your local distributor or dealer for warranty coverage.

NAUTILUS | BOWFLEX | SCHWINN



EN

8011852.110120.E